Cast Iron Commercial Hot Water or Steam Boiler D250, JF, 41L

PARTS KITS AND OPTIONAL ACCESSORIES

Ordering Instructions

Order Parts through your nearest supplier.

When ordering parts, obtain Model Number and Serial Number from data plate on your boiler.

Include following information when ordering.

Part Number _____

Part Description _____

Boiler Model Number _____

Boiler Serial Number _____

ECR international

Manufactured by:
ECR International Inc.
2260 Dwyer Avenue, Utica, NY 13501
Tel. 800 325 5479
www.ecrinternational.com
PN 240013852 REV. E [10/9/2026]

COMPLETE BOILER MATERIAL LIST

Boiler Model	CAST SECTIONS			COMPONENT CARTONS (a)			TRIM CARTONS (b)		ACCESSORY CARTON (c)	END PANEL CARTON (d)	
	LEFT	INNER	RIGHT	300	400	500	STEAM TRIM	WATER TRIM			
	902000028	902000029	902000030	STD 550004402 CSD-1 550004415	STD 550004403 CSD-1 550004416	STD 550004404 CSD-1 550004417	CSD-1 SEE NOTES			JACKET 550004414	BASE 550002860
400	1	3	1	-	1	-	STD 41200061	STD 550004418 CSD-1 550004421	STD 550004424 CSD-1 550004425	1	1
500	1	4	1	-	-	1			STD 550004426 CSD-1 550004427	1	1
600	1	5	1	2	-	-	STD 41200062		STD 550004428 CSD-1 550004429	1	1
700	1	6	1	1	1	-			STD 550004430 CSD-1 550004431	1	1
800	1	7	1	-	2	-		STD 550004419 CSD-1 550004421	STD 550004432 CSD-1 550004433	1	1
900	1	8	1	-	1	1	STD 41200063		STD 550004434 CSD-1 550004435	1	1
1000	1	9	1	-	-	2			STD 550004436 CSD-1 550004437	1	1
1100	1	10	1	1	2	-			STD 550004438 CSD-1 550004439	1	1
1200	1	11	1	-	3	-			STD 550004440 CSD-1 550004441	1	1
1300	1	12	1	1	-	2			STD 550004442 CSD-1 550004443	1	1
1400	1	13	1	-	1	2		STD 550004420 CSD-1 550004421	STD 550004444 CSD-1 550004445	1	1
1500	1	14	1	-	-	3			STD 550004446 CSD-1 550004447	1	1

(a) Component Cartons- choose STD or CSD-1. Qty required shown in table. See page 4.
(b) Trim Cartons-See pages 8 & 9
Water CSD-1: requires both kit 550004421 and STD kit.
Steam CSD-1 Grav/Cond pump: requires both kit 41257103 and STD kit.
Steam CSD-1 boiler feed pump: requires both kit 41257104 and STD kit.
(c) Accessory Cartons: choose STD or CSD-1. See page 3.
(d) Jacket end panel cartons- see page 4. Base end panels see page 5.

For complete CSD-1 parts and instructions, see CSD-1 Supplemental instruction included with this packet.

ACCESSORY CARTON													
PARTS DESCRIPTION	PART NO.	400	500	600	700	800	900	1000	1100	1200	1300	1400	1500
4” Push Nipples	43300977	8	10	12	14	16	18	20	22	24	26	28	30
5/8” - 11NC x 7 Stud	14695304	8	10	12	14	16	18	20	22	24	26	28	30
5/8” - 11NC Hex Nut	1330005	16	20	24	28	32	36	40	44	48	52	56	60
5/8” Flat Washer	14695306	16	20	24	28	32	36	40	44	48	52	56	60
Non-Asbestos Furnace Cement - Pint	1440001	2	2	2	2	2	2	2	2	2	2	2	2
3/4” Drain Valve	240009323	1	1	1	1	1	1	1	1	1	1	1	1
1” Sq. Head Plugs	1395004	4	4	4	4	4	4	4	4	4	4	4	4
Junction Box Assembly 1-3 Base	550002870	1	1	1	1	1	1	1	1	1	1	1	1
Hercules Grip 1/4 Pint	14691302	1	1	1	1	1	1	2	2	2	2	2	2
Bolt,5/16-18x3/4	1040001	8	8	12	12	12	12	16	16	16	16	16	16
Nut,5/16-18	1330007	8	8	12	12	12	12	16	16	16	16	16	16
Knob,Jkt	13702153	1	1	2	2	2	2	3	3	3	3	3	3
Scr,8x3/4	14695003	2	2	2	2	2	2	2	2	2	2	2	2
Scr,8-32x3/8	14695004	1	1	2	2	2	2	3	3	3	3	3	3
Bolt,1/4-20x2”	14695303	1	1	2	2	2	2	3	3	3	3	3	3
Scr,10-32x1/2	14695307	1	1	2	2	2	2	3	3	3	3	3	3
Nut10-32	14695308	1	1	2	2	2	2	3	3	3	3	3	3
*250 Va Transformer Kit	550002906	-	-	1	1	1	1	1	1	1	1	1	1
*Assy,Jct Box,2/3	550002907	-	-	1	1	1	1	1	1	1	1	1	1

* Csd-1 Items (For More Info See Csd-1 Supplement)

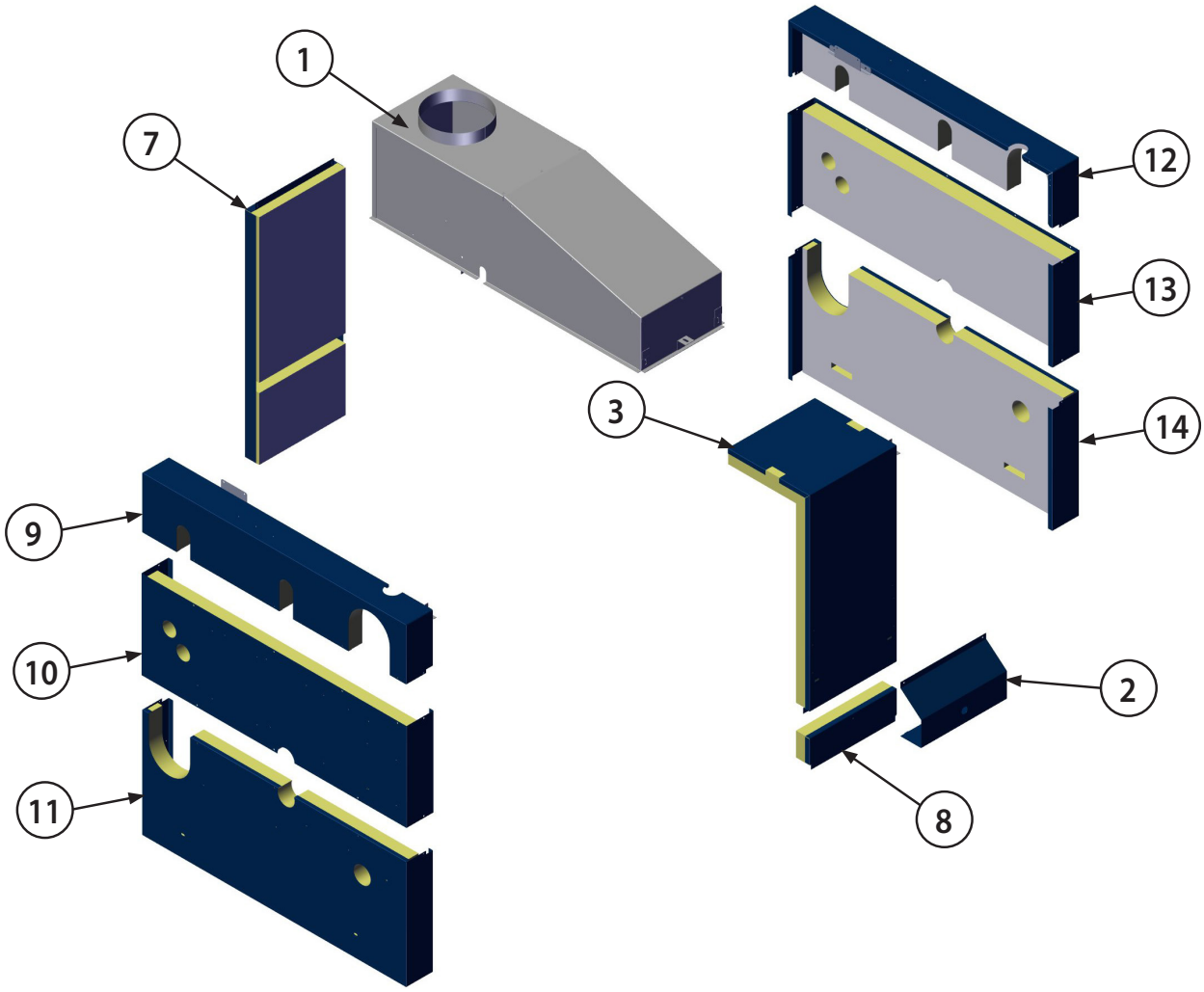

	COMPONENT CARTON MATERIAL LIST			
ITEM	**PARTS DESCRIPTION**	**Model 300**	**Model 400**	**Model 500**
1	Draft Hood	42557113	42557114	42557115
2	Control Panel Access Door	109009211		
3	Top Front Panel Assembly	109010544	109010545	109010546
4	Base Assembly (see pg 3)	550004405	550004406	550004407
5	Control Panel Assembly (not shown)	550001801	550001801	550001802
5a	CSD-1 Control Panel Assembly (not shown) (Refer to CSD-1 manual for parts list)	550001869	550001869	550001870
6	Intermediate Jacket Carton (not shown)	550004408	550004409	550004410
7	Rear Panel (Included in item 6)	109010548	109010549	109010550
8	Lower Access Door (Included in item 6)	109006759	109006760	109006761
JACKET END PANEL CARTON (550004414) MATERIAL LIST				
9	Panel End Left Upper	109010538		
10	Panel End Left Middle	109010540		
11	Panel End Left Lower	109010542		
12	Panel End Right Upper	109010539		
13	Panel End Right Middle	109010541		
14	Panel End Right Lower	109010543		

Base Assembly

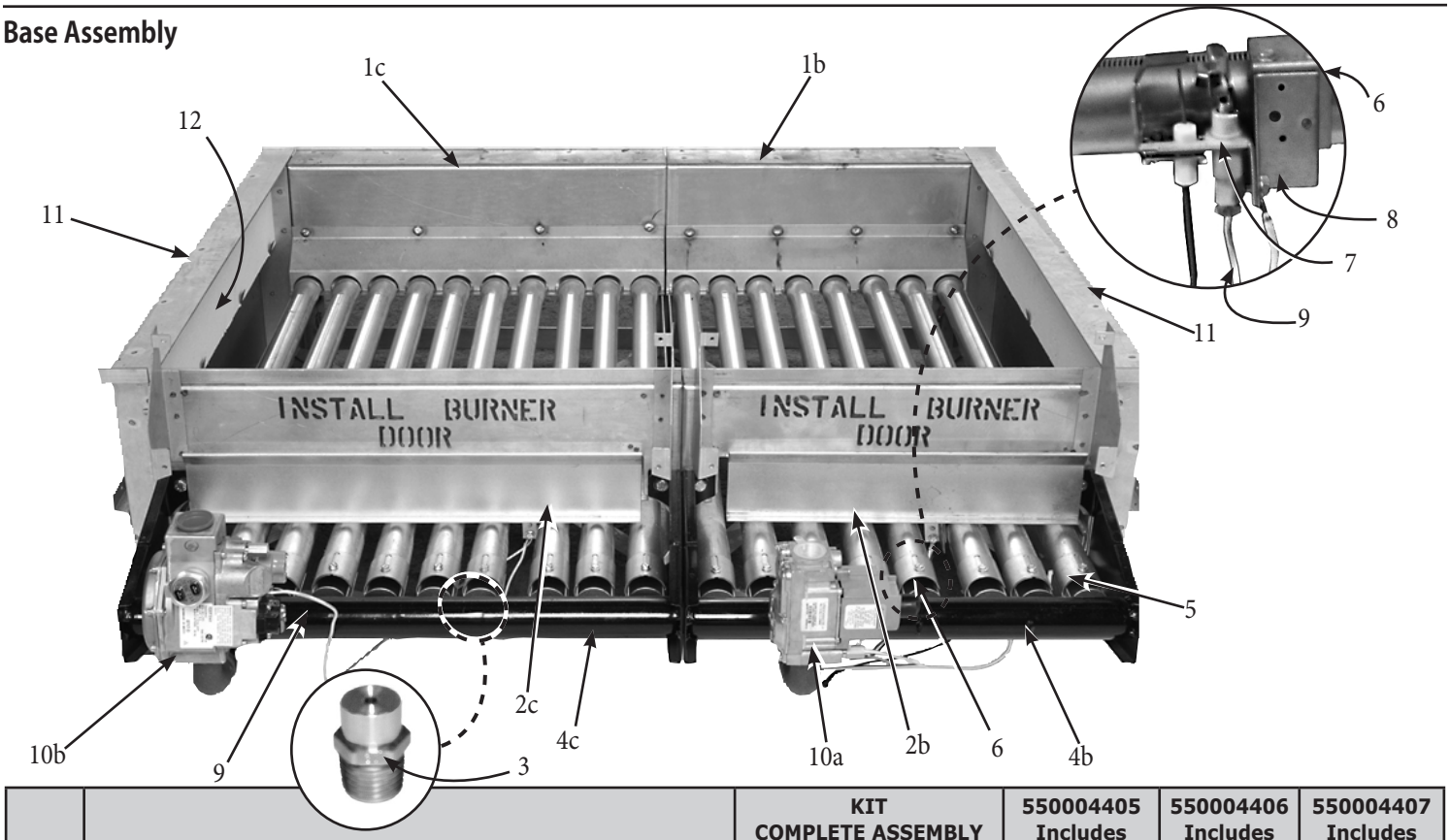

No.	PARTS DESCRIPTION	KIT COMPLETE ASSEMBLY	550004405 Includes	550004406 Includes	550004407 Includes
		MODEL	300	400	500
		PART NO.	QTY.	QTY.	QTY.
1a	300 Base (Not Shown)	109009240	1	-	-
1b	400 Base	109009241	-	1	-
1c	500 Base	109009242	-	-	1
2a	300 Fire Door *(Not Shown)*	42557133	1	-	-
2b	400 Fire Door	42557134	-	1	-
2c	500 Fire Door	42557135	-	-	1
3	Orifice #32 *(In Manifold)*	240013126	6	8	10
4a	300 Manifold *(Not Shown)*	240006633	1	-	-
4b	400 Manifold	240006634	-	1	-
4c	500 Manifold	240006635	-	-	1
5	Main Burner	14615302	5	7	9
6	Main Burner with Pilot Bracket	14615301	1	1	1
7	Pilot with Ignition Wire	14662099	1	1	1
8	Pilot Mounting Bracket	42557029	1	1	1
9	Pilot Tubing	14615005	1	1	1
10a	VR8304M Gas Valve *(300 & 400 Base)*	240013875	1	1	-
10b	7000 DERHC Gas Valve *(500 Base)*	240013874	-	-	1
11	Base End Panels Kit	550002860	1		

Control Assembly

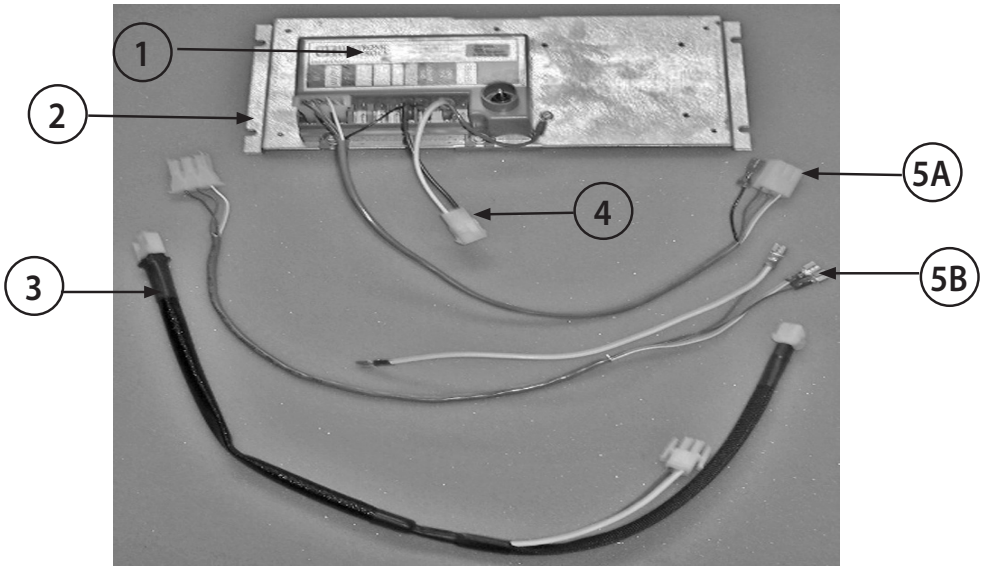

CONTROL ASSEMBLY				
		Control Panel Assembly 300 & 400 Base	Control Panel Assembly 500 Base	
COMPLETE CONTROL PANEL ASSEMBLY		550001801	550001802	
NO.	PARTS DESCRIPTION	PART NO.	PART NO.	QUANTITY
1	Intermittent Pilot Module	14662070	14662070	1
2	Control Mounting Panel	109006832	109006832	1
3	Base Power Harness	240006732	240006732	1
4	Spark Control Harness	240006625	240006625	1
5A	Harness Gas Valve	240006624	-	1
5B	Harness Gas Valve	-	240006841	1

FOR ADDITIONAL CSD-1 PARTS SEE CSD-1 SUPPLEMENT IN THIS PACKET.

JUNCTION BOX ASSEMBLY

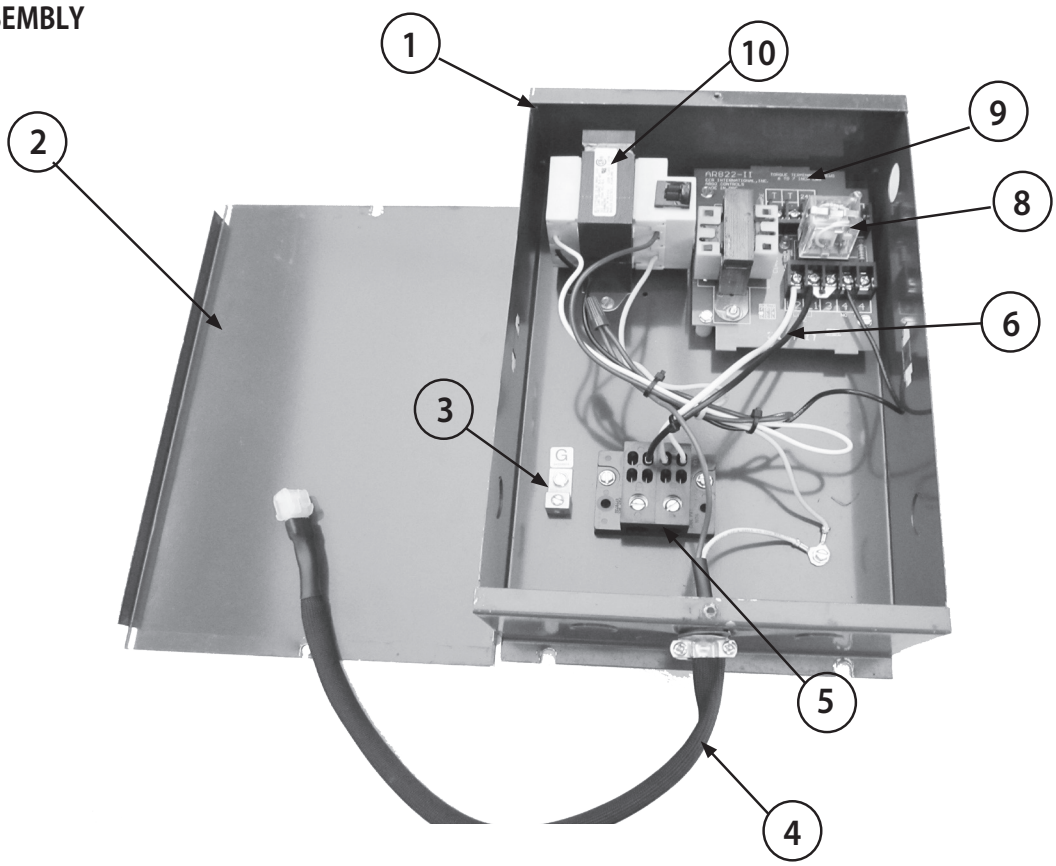

JUNCTION BOX ASSEMBLY			
COMPLETE JUNCTION BOX ASSEMBLY 1-3 BASE - 550002870			MODELS 400-1500
			1
NO.	PARTS DESCRIPTION	PART NO.	QTY.
1	Junction Box	109006843	1
2	Box Cover	109006844	1
3	Ground Lug	212000015	1
4	Harness, Main Burner	240010345	1
5	Terminal Block	212000014	1
6	Harness, Relay Power	240006697	1
7	Harness, Transformer	240006698	-
8	AR822II Control Board	240006685	1
9	Relay on AR822II	R35C	1
10	Transformer 75VA	240006995	1

FOR ADDITIONAL CSD-1 PARTS SEE CSD-1 SUPPLEMENT IN THIS PACKET.

STEAM TRIM CARTON: STANDARD					
PARTS DESCRIPTION	PART NO.	UNIT	QUANTITY PER CARTON		
			SA-1 41200061	SA-2 41200062	SA-3 41200063
67D-1 McDonnell & Miller LWCO	14626042	Ea.	1	1	1
PA404A Pressuretrol	14662015	Ea.	1	1	1
Gauge-water level 22-182-10 8-1/16″ Tube	GA-004.00	Ea.	1	1	1
2-1/2″ Round Steam Gage	14623006	Ea.	1	1	1
3/4″ x 3/4″ Safety Valve	1570001	Ea.	1	-	-
1″ x 1″ Safety Valve	1570002	Ea.	-	1	-
1-1/4″ x 1-1/2″ Safety Valve	1570003	Ea.	-	-	1
1-1/2″ x 2″ Safety Valve	1570004	Ea.	-	-	-
1/4″ Brass Syphon Loop	14643005	Ea.	1	1	1
1/4″ Brass Tee	14693057	Ea.	1	1	1
1/4″ x 2″ Brass TBE Nipple	14607054	Ea.	1	1	1

STEAM TRIM CARTON: CSD-1 OPTIONS				
PARTS DESCRIPTION	PART NO.	UNIT	QUANTITY PER CARTON	
			GRAV/COND PUMP 41257103	BLR FEED PUMP 41257104
Bshg,1"X1/4",Frgd Stl	240006953	Ea.	1	-
Elb,St,1/2,45°,Brs	240007541	Ea.	1	-
Nipple 1/2 X 1-1/2 Lg Brass	240007542	Ea.	1	-
Bshg,1/2"X1/4",247	1060001	Ea.	-	2
Npl,1/2x3-1/2,Brs	14607024	Ea.	-	2
Lwco,150,S-B,Md,172002	14626306	Ea.	-	1
Tee,Brs,1/2x1/2x1/4	14693051	Ea.	-	1
Cplg,Brs,1/2"	14693052	Ea.	-	1
Siphon,Brs,Rvrs Bend,60163 90 *See Notes	14643004	Ea.	1	1
Ctrl,Sw,Prsr,Stm,Man,Rst	14662311	Ea.	1	1
Lwco,Mnl,Rst,Csd1,Aprvd,Sht Probe	240007388	Ea.	1	1

WATER TRIM CARTON: STANDARD					
PARTS DESCRIPTION	PART NO.	UNIT	QUANTITY PER CARTON		
			550004418	550004419	550004420
Bshg,1/2"X1/4",247	1060001	Ea.	1	1	1
Ga,Temp/Press, 2”Shank,1pc,Sngl	1260006SP	Ea.	1	1	1
Vlv,Rlf,Asme,30psi,3/4",Fml Pipe Thrd+	14622011	Ea.	1	-	-
Vlv,Rlf,Asme,30psi,3/4x1,970 kb,10-614-05	14622311	Ea.	-	1	-
Vlv,Rlf,Asme,30psi, 1x1-1/4,10-615-05	14622312	Ea.	-	-	1
Well Control 1/2” 123869a B.p.	14662804	Ea.	1	1	1
Ctrl,Astat,L4006a2195/B +	240006706	Ea.	1	1	-

WATER TRIM CARTON: CSD-1			
PARTS DESCRIPTION	PART NO.	UNIT	QUANTITY PER CARTON
			550004421
Bshg,1/2"X1/4",247	1060001	Ea.	1
Ga,Temp/Press, 2"Shank,1pc,Sngl	1260006SP	Ea.	1
Well Control 1/2" 123869a B.p.	14662804	Ea.	1
Ctn #3s 14-1/8x7-1/2x8-5/8	PK-006.02	Ea.	1
Ctrl,Astat,L4006e1091/U	240013868	Ea.	1
Lwco,Mnl,Rst,Csd1,Aprvd,Sht Probe	240007388	Ea.	1

ALTERNATE COMPONENT LIST		
NO.	PARTS DESCRIPTION	PART NO.
1	Steam Manual Reset Pressure Control (L404C-1147)	14662311
2	LWCO and Feeder #47-2 (Models 300-1500)	1280001
3	Water High Limit Control with Manual Reset – (L4006E-1109 and well)	43300520
4	Strap-on Operating Control (L6006C-1034)	14662313
5	LWCO with Manual Reset (PS852M-24) – to eliminate the 67D LWCO	14626305
9	CSD-1 Gas Train (Refer to CSD-1 manual for parts list)	---

NOTES

ECR international

2260 Dwyer Avenue, Utica, NY 13501

Tel. 800 325 5479
www.ecrinternational.com

All specifications subject to change without notice.

©2026 ECR International, Inc.