Cast Iron Commercial
Natural Gas Steam & Water Boiler
D250, JF, 41L

INSTALLATION, OPERATION & MAINTENANCE MANUAL

ECR international

Manufactured by:
ECR International Inc.
2260 Dwyer Avenue, Utica, NY 13501
Tel. 800 325 5479
www.ecrinternational.com
PN 240013851 REV. D [10/09/2026]

Contents

Ratings And Capacities 3
Shipment Check List 4
Accessory Carton Check List 5
Safety Information 6
Before Installing 7
Ventilation And Combustion Air 8
Vent Installation 10
Boiler Dimensions 13
Installation – Assembly 14
Tappings 24
Boiler Piping 25
Connecting Gas Service 28
Electrical Wiring 30
Wiring Diagrams 31
Operation And Service 32
Checking And Adjusting 34
Cleaning And Maintenance 35
Pilot System Troubleshooting Table 36

SAFETY SYMBOLS

**KEEP THIS MANUAL NEAR BOILER.
RETAIN FOR FUTURE REFERENCE.**

⚠ DANGER

Indicates a hazardous situation which, if not avoided, WILL result in death or serious injury.

⚠ WARNING

Indicates a hazardous situation which, if not avoided, could result in death or serious injury.

⚠ CAUTION

Indicates a hazardous situation which, if not avoided, could result in minor or moderate injury.

NOTICE

Indicates information which should be followed to ensure proper installation and operation.

⚠ WARNING

Fire, explosion, asphyxiation and electrical shock hazard. Improper installation could result in death or serious injury. Read this manual and understand all requirements before beginning installation.

For parts list see 240013852 manual included with your boiler literature package.

RATINGS AND CAPACITIES - CHART 1

Model	Input (MBH)	Output (1) Gross Output Mbh		Net AHRI Ratings (2)			Flue Outlet No. & Size			Chimney Size (6)	Flue Collector Size to Chimney	Horse-power Gross Output (4)	Pressure Drop Thru Water Boiler (5)		AFUE / Thermal Efficiency (Water) (Steam)
		Water	Steam	Steam (Sq Ft) (3)	Steam Mbh	Water MBH	8″	10″	12″	I.D. x Ht.			GPM	In. Water	
400	360	288	284	889	213	250		1		10"X20'	10	8.49	25.2 50.4	0.27 0.86	80 79
500	450	360	356	1,111	267	313			1	12"X20'	12	10.61	31.5 63.0	0.40 1.20	80 79
600	540	432	427	1,333	320	376	2			12"X20'	12	12.73	37.8 75.8	0.50 1.70	80 79
700	630	504	498	1,556	373	438	1	1		12"X20'	12	14.86	44.1 88.2	0.70 2.50	80 79
800	720	576	569	1,778	427	501		2		14"X20'	14	16.98	50.4 100.8	0.88 2.90	80 79
900	810	648	640	2,000	480	563		1	1	14"X20'	14	19.10	56.7 113.4	1.10 3.80	80 79
1000	900	720	711	2,222	533	626			2	14"X20'	14	21.22	63.0 126.0	1.30 4.00	80 79
1100	990	792	782	2,445	587	689	1	2		16"X20'	16	23.35	69.3 138.6	1.50 5.00	80 79
1200	1,080	864	853	2,667	640	751		3		16"X20'	16	25.47	75.6 151.2	1.80 6.00	80 79
1300	1,170	936	924	2,889	693	814	1		2	16"X20'	16	27.59	81.9 163.8	2.00 5.60	80 79
1400	1,260	1,008	995	3,111	747	877		1	2	18"X20'	18	29.71	88.2 176.4	2.40 7.00	80 79
1500	1,350	1,080	1,067	3,334	800	939			3	18"X20'	18	31.84	94.5 189.0	2.60 8.30	80 79

1) Ratings are at sea level to 2,000 feet. For altitudes above 2,000 feet, reduce all ratings 4% for each 1,000 feet above sea level
2) Net water ratings based on piping and pickup allowance of 1.15. Net steam ratings based on an allowance of 1.333 (400-1500). Contact Technical Support before selecting boiler for installations having unusual piping and pick-up factors, such as intermittent system operations, extensive piping systems, etc.
3) Ratings in square feet are computed at 240 Btuh/square foot for steam boilers.
4) Ratings based on 33,500 Btuh per horsepower.
5) Pressure drop based on given flow from single outlet and returning to single inlet at the opposite end of the boiler.
6) Chimney sizes shown are one option based on a typical venting system as shown in Figure 6, and sized according to the National Fuel Gas Code, assuming Type B double wall vent and vent connectors, Other venting system designs are acceptable as shown on Flue Connection And Venting section of this manual. For further chimney design and sizing information, consult the National Fuel Gas Code, ANSI Z223.1/NFPA 54-latest revision, or ASHRAE HVAC Systems and Equipment Handbook, Chimney, Gas Vent, and Fireplace Systems, or the Standard for Chimneys, Fireplaces, Vents, and Solid Fuel Burning Appliances. NFPA 211. Follow standard engineering practice.

Boiler Model	CAST SECTIONS			COMPONENT CARTONS (a)			TRIM CARTONS (b)		ACCESSORY CARTON (c)	END PANEL CARTON (d)	
	LEFT	INNER	RIGHT	300	400	500	STEAM TRIM	WATER TRIM			
	902000028	902000029	902000030	STD 550004402 CSD-1 550004415	STD 550004403 CSD-1 550004416	STD 550004404 CSD-1 550004417	CSD-1 SEE NOTES			JACKET 550004414	BASE 550002860
400	1	3	1	-	1	-	STD 41200061	STD 550004418 CSD-1 550004421	STD 550004424 CSD-1 550004425	1	1
500	1	4	1	-	-	1			STD 550004426 CSD-1 550004427	1	1
600	1	5	1	2	-	-	STD 41200062		STD 550004428 CSD-1 550004429	1	1
700	1	6	1	1	1	-			STD 550004430 CSD-1 550004431	1	1
800	1	7	1	-	2	-		STD 550004419 CSD-1 550004421	STD 550004432 CSD-1 550004433	1	1
900	1	8	1	-	1	1	STD 41200063		STD 550004434 CSD-1 550004435	1	1
1000	1	9	1	-	-	2			STD 550004436 CSD-1 550004437	1	1
1100	1	10	1	1	2	-			STD 550004438 CSD-1 550004439	1	1
1200	1	11	1	-	3	-			STD 550004440 CSD-1 550004441	1	1
1300	1	12	1	1	-	2			STD 550004442 CSD-1 550004443	1	1
1400	1	13	1	-	1	2		STD 550004420 CSD-1 550004421	STD 550004444 CSD-1 550004445	1	1
1500	1	14	1	-	-	3			STD 550004446 CSD-1 550004447	1	1

For further component information see Parts, Kits and Optional Accessories Manual provide with your boiler see pages listed.

(a) Component Cartons- choose STD or CSD-1. Qty required shown in table.
(b) Trim Cartons
Water CSD-1: requires both kit 550004421 and STD kit.
Steam CSD-1 Grav/Cond pump: requires both kit 41257103 and STD kit.
Steam CSD-1 boiler feed pump: requires both kit 41257104 and STD kit.
(c) Accessory Cartons: choose STD or CSD-1.

For complete CSD-1 parts and instructions, see CSD-1 Supplemental instruction included with this packet.

ACCESSORY CARTON													
PARTS DESCRIPTION	PART NO.	BOILER MODEL NUMBERS AND QUANTITIES											
		400	500	600	700	800	900	1000	1100	1200	1300	1400	1500
4” Push Nipples	43300977	8	10	12	14	16	18	20	22	24	26	28	30
5/8” - 11NC x 7 Stud	14695304	8	10	12	14	16	18	20	22	24	26	28	30
5/8” - 11NC Hex Nut	1330005	16	20	24	28	32	36	40	44	48	52	56	60
5/8” Flat Washer	14695306	16	20	24	28	32	36	40	44	48	52	56	60
Furnace Cement - Pint	1440001	2	2	2	2	2	2	2	2	2	2	2	2
FB-1 Fitting Bag	41200051	1	1	-	-	-	-	-	-	-	-	-	-
FB-2 Fitting Bag	41200052	-	-	1	1	1	1	1	-	-	-	-	-
FB-3 Fitting Bag	41200053	-	-	-	-	-	-	-	1	1	1	1	1
3/4” Drain Valve	14622001	1	1	1	1	1	1	1	1	1	1	1	1
Nipple Paste - 4oz.	14691302	1	1	1	1	1	1	1	1	1	1	1	1
1” Sq. Head Plugs	1395004	4	4	4	4	4	4	4	4	4	4	4	4
Junction Box Assembly 1-3 Base	550002870	1	1	1	1	1	1	1	1	1	1	1	1
Hercules Grrip 1/4 Pint	14691302	1	1	1	1	1	1	2	2	2	2	2	2

Safety Information

IMPORTANT: Read the following instructions COMPLETELY before installing!!

⚠ WARNING

Fire, explosion, asphyxiation and electrical shock hazard. Improper installation could result in death or serious injury. Read this manual and understand all requirements before beginning installation.

⚠ WARNING

Keep boiler area clear and free from combustible materials, gasoline and other flammable vapors and liquids.

DO NOT obstruct air openings to the boiler room.

Modification, substitution or elimination of factory equipped, supplied or specified components may result in personal injury or loss of life.

TO THE OWNER - Installation and service of this boiler must be performed by a qualified installer.

TO THE INSTALLER - Leave all instructions with boiler for future reference.

When this product is installed in the Commonwealth of Massachusetts the installation must be performed by a Licensed Plumber or Licensed Gas Fitter.

1. Never test for leaks with an open flame. Use soap suds to check all connections. This will avoid any possibility of fire or explosion.
2. Boiler is configured for operation with natural gas. Over-firing will result in premature failure of boiler sections and cause dangerous operation. Verify there is adequate gas supply piping.
3. Never vent this boiler into enclosed space. Always connect boiler to chimney and vent to outside. Never vent to another room or inside a building.
4. Verify there is adequate air supply for complete combustion.
5. Follow regular service and maintenance schedule for efficient and safe operation.

⚠ WARNING

Fire hazard. Do not install boiler on combustible flooring such as carpeting or wood flooring. Failure to follow these instructions could result in death or serious injury.

6. DO NOT install boiler on combustible flooring such as carpeting or wood flooring.

When Your Boiler Arrives

When boiler arrives be sure to save and refer to instructions.

Inspect each item received for visible damage. If any parts are damaged, report this to freight company immediately and request them to call and make inspection before you make any installation. Have inspector prepare a signed report. Send copy of report to manufacturer.

We must have the signed inspection report of the freight company to prove their liability.

Read these instructions carefully before beginning the installation to be sure all packages have been received. It is recommended that you follow the step-by-step instructions for best assembly results. Before discarding any packing material carefully examine for loose parts. Also store all parts received where they will not be lost or damaged.

Codes Governing Installation

Installation must conform to the requirements of the authority having jurisdiction or, in the absence of such requirements, to the National Fuel Gas Code, ANSI Z223.1/NFPA54.

Where required by the authority having jurisdiction, the installation must conform to the standard for Controls and Safety Devices for Automatically Fired Boilers, ANSI/ASME CSD-1. Additional controls and safety devices are required for CSD-1.

Installation

Boiler is designed to provide wide heating capacity range with multiple burner modules, each equipped with its own set of controls. For purposes of orientation, gas manifold location is considered the front. Instructions are written for assembly of boiler starting with left side and working to right side.

A hot water boiler installed above radiation level or as required by the Authority having jurisdiction, must be provided with a low water cutoff device at the time of boiler installation.

For Your Safety

The installer must verify that at least one carbon monoxide alarm has been installed within a residential living space or home, following the alarm manufacturer's instructions and applicable codes before putting the appliance into operation.

Boiler Location

Locate boiler on level, non-combustible foundation as near to chimney or flue as possible. Allow 24 inches at front and sides of boiler for servicing and cleaning. When installed in utility room, the door should be wide enough to allow the largest boiler parts to enter, or permit replacement of any other appliance in the same room.
Installing contractor ***must*** provide ventilated foundation for boiler when installing:

- Over a room
- Over electrical wiring or cables of any kind
- If concrete floor is not cured or water is channeled under concrete floor

The boiler shall be installed such that the automatic gas ignition system components are protected from water (dripping, spraying, rain, etc.) during appliance operation and service (circulator replacement, control replacement, etc.)

Combustion Air

Provide combustion and ventilation air in accordance with the section "Air for Combustion and Ventilation", of the National Fuel Gas Code, ANSI Z223.1/NFPA 54, or applicable provisions of the local building codes.

Chimney And Vent Pipe Connection

This is a very important part of the heating system. It must be clean, the right size, properly constructed and in **Good Condition**. No boiler can function properly with a bad chimney. See Pages 8-12 for specific venting instructions.

Flue pipe should be same size as draft hood outlet from boiler to flue collector. See **Chart 1** for Typical Chimney Size. Maintain a minimum upward slope of 1/4 inch per linear foot from boiler to the chimney. Fasten joints together with sheet metal screws to prevent sagging.

Minimum Vent Pipe Clearance

If the vent pipe must go through a crawl space, double wall vent pipe should be used. Where vent passes through a combustible wall or partition, use a ventilated metal thimble. The thimble should be 4 inches larger in diameter than vent pipe. If boiler is installed with single wall galvanized type vent pipe, it must have 6 inches clearance between its surface and any combustible material. If UL listed type B (insulated) vent pipe is used, clearance between it and combustible material to be as listed by pipe manufacturer.

⚠ WARNING

Fire hazard. Do not install boiler on combustible flooring such as carpeting or wood flooring. Failure to follow these instructions could result in death or serious injury.

CHART 2
FOR INSTALLATION ON NON-COMBUSTIBLE FLOORS ONLY,
MINIMUM CLEARANCES TO COMBUSTIBLE CONSTRUCTION

	Inputs of 400 MBH or less	Inputs over 400 MBH
Top	52″	52″
Front	18″	18″
Flue Collector	6 "	6″
Rear	18″	24″
Sides	18″	24″
Steam/Water Piping	1″	1″

Greater clearances (24″) for access should supersede fire protection clearances.

⚠ WARNING

Asphyxiation hazard. Ensure enough air is available for proper combustion, avoiding hazard due to lack of oxygen.

⚠ WARNING

Air openings to combustion area shall not be obstructed. Follow Chart 3 to insure adequate combustion air is maintained.

COMBUSTION AIR REQUIREMENTS – Chart #3

(MINIMUM SQUARE INCHES OPENING)

MODEL NUMBER	BOILER MODULES	*UNCONFINED AREA		**CONFINED AREA OUTSIDE COMBUSTION AIR	
		OUTSIDE COMBUSTION AIR 1 SQ. IN /4000 Btu/hr (SEE FIG. 2)	INSIDE COMBUSTION AIR 1 SQ. IN. /1000 Btu/hr (SEE FIG. 1)	VERT. DUCTS 1 SQ. IN. /4000 Btu/hr	HORZ. DUCTS 1 SQ. IN. /2000 Btu/hr
400	1	100	400	100	200
500	1	125	500	125	250
600	2	150	600	150	300
700	2	175	700	175	350
800	2	200	800	200	400
900	2	225	900	225	450
1000	2	250	1000	250	500
1100	3	275	1100	275	550
1200	3	300	1200	300	600
1300	3	325	1300	325	650
1400	3	350	1400	350	700
1500	3	375	1500	375	750

** Unconfined area: A space whose volume is not less than 50 cubic feet per 1000 Btu per hour of all appliances installed in that space (cubic feet of space = height x width x length).*

*** Confined area: A space whose volume is less than 50 cubic feet per 1000 Btu per hour of all appliances installed in that space (cubic feet of space = height x width x length).*

Figure 1

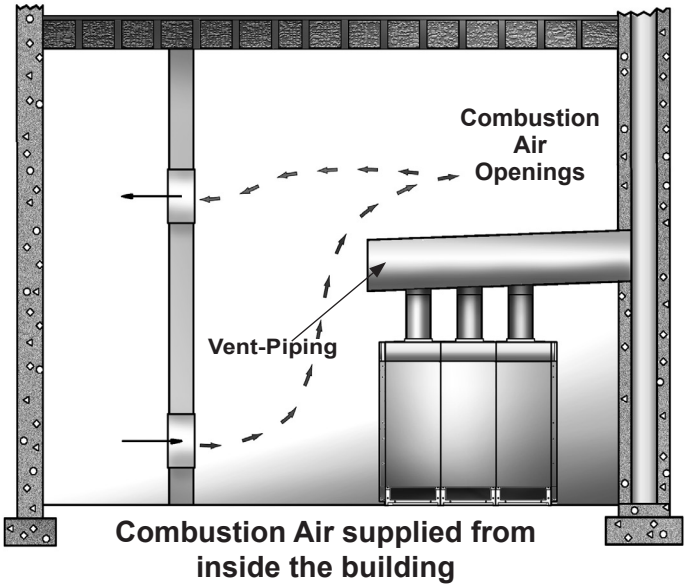

Figure 2

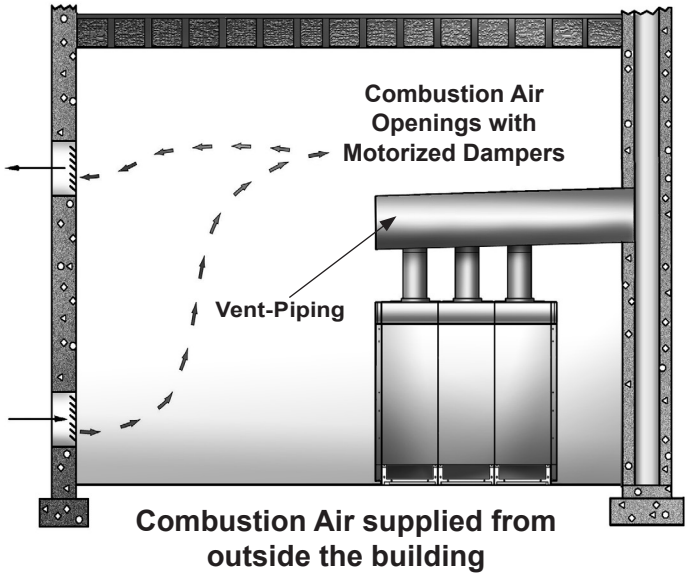

Important Vent-Piping Note: Sloped vent pipe at least 1/4" for every 1' to the vent terminal.

1. Provide combustion and ventilation air in accordance with the section "Air for Combustion and Ventilation", of the National Fuel Gas Code, ANSI Z223.1/NFPA 54, or applicable provisions of the local building codes.
2. Boiler is located in unconfined space in building or conventional construction frame, masonry or metal building, infiltration normally is adequate to provide air for combustion and ventilation. However, if equipment is located in building of tight construction (See National Fuel Gas Code, ANSI Z223.1), boiler area should be considered as confined space. If there is any doubt, install air supply provisions in accordance with latest revision of National Fuel Gas Code.
3. Boiler is installed in unconfined space, in building of tight construction, air for combustion and ventilation must be obtained from outdoors or from spaces freely communicating with outdoors. Permanent opening or openings having total free area of not less than 1 square inch per 5,000 Btu per hour of total input rating of all appliances shall be provided. Ducts may be used to convey makeup air from outdoors and shall have same cross-sectional area of openings to which they are connected.
4. When air for combustion and ventilation is from inside buildings, confined space shall be provided with two permanent openings, one starting 12 inches from top and one 12 inches from bottom of enclosed space. Each opening shall have minimum free area of 1 square inch per one thousand (1000) Btu per hour of total input rating of all appliances in enclosed space, but must not be less than one hundred (100) square inches. Openings must freely communicate directly with other spaces of sufficient volume so combined volume of all spaces meets criteria for unconfined space. **Figure 1**.
5. When boiler is installed in confined space and all air is provided from outdoors confined space shall be provided with one or two permanent openings according to methods A or B (see page 10). When ducts are used, they shall be of same cross sectional area as free area of area of openings to which they connect. Minimum dimension of rectangular air ducts shall be not less than 3 x 3 inches or 9 square inches.

A. When installing two openings, one must commence within 12 inches from top and other within 12 inches from bottom of enclosure. Openings shall communicate directly, or by ducts, with outdoors or spaces (crawl or attic) that freely communicate with outdoors. One of following methods must be used to provide adequate air for ventilation and combustion.

1) When directly communicating with outdoors, each opening shall have minimum free area of 1 square inch per 4,000 Btu per hour of total input rating of all equipment in enclosure. Refer to **Figure 2** on previous page.

2) When communicating with outdoors by means of vertical ducts, each opening shall have minimum free area 1 square inch per 4,000 Btu per hour of total input rating of all appliances in the enclosed space.

3) If horizontal ducts are used, each opening and duct shall have minimum free area 1 square inch per 2,000 Btu per hour of total input rating of all appliances in the enclosed space.

B. One permanent opening, commencing within 12 inches of top of enclosure, shall be permitted where equipment has clearances of at least 1 inch from sides, 1 inch from back, and 6 inches from front of boiler. Opening shall directly communicate with outdoors or shall communicate through vertical or horizontal duct to outdoors or spaces (crawl or attic) that freely communicate with outdoors. Openings must have minimum free area of 1 square inch per 3000 Btu per hour of total input rating of all equipment located in enclosure. Free area must be no less than sum of areas of all vent connectors in confined space.

6. In calculating free area using louvers, grilles or screens for above, consideration shall be given to their blocking effect. Screens used shall not be smaller than 1/4 inch mesh. If free area through design of louver or grill is known, it should be used in calculating size opening required to provide free area specified. If design and free area is not known, it may be assumed that wood louvers will have 20-25% free area and metal louvers and grilles will have 60-75% free area. Louvers and grilles should be fixed in open position or interlocked with boiler so they are opened automatically during boiler operation.

VENT INSTALLATION

⚠ WARNING

Vent connectors serving appliances vented by natural draft shall not be connected into any portion of mechanical draft systems operating under positive pressure.

1. The vent pipe must slope upward from the boiler not less than 1/4" for every 1' to the vent terminal. **Figures 1 & 2.**
2. Horizontal portions of the venting system shall be supported rigidly every 5 feet and at the elbows. No portion of the vent pipe should have dips or sags.

Flue Connection And Venting

Vent installations shall be in accordance with "Venting of Equipment", of the National Fuel Gas Code, ANSI Z223.1/ NFPA 54, or applicable provisions of the local building codes.

1. Consult dimensional drawing for number and size of flue pipes required for each size boiler.
2. Maintain minimum upward slope of 1/4 inch per linear foot from the boiler to chimney.
3. Run flue pipe directly as possible. Keep turns to a minimum. Insert flue pipe into, but not beyond, inside wall of chimney. Do not connect into a chimney serving an open fireplace.
4. Insulate flue pipe where it passes near combustible material.
5. Rigidly support pipe with hangers and straps.
6. Extend chimneys at least 2 feet above any object within radius of 15 feet, including roof.
7. Install hood on all flue pipes which extend through roof. In most locations, venting of boiler relies on natural draft. In as much as energy available from natural draft is quite low, serious thought should be given to vent system design, i.e., adequate size, use of gradual transitions, tees, elbows, etc., close proximity of boiler and chimney. On all boilers, vertical risers must be at least as large as vent openings on draft-hood. Boiler manufacturer makes no specific recommendations regarding application of draft inducers that may be used with this boiler. If draft inducer is used, it is up to installing contractor and draft inducer manufacturer to determine proper application.

Flue Connection And Venting - Continued

Simple vent system consists of 6-foot minimum vertical rise immediately off draft-hood, as shown in **Figure 3**. Terminate this vertical flue above building roof with suitable rain cap at least 2 feet above surrounding obstructions, i.e., parapets, adjacent buildings, penthouses, etc. This type of vent system applies to single draft-hood boilers ONLY, and has limited practical use, because it is restricted to single-story boiler rooms and because of problems encountered in roof flashing.

Vertical venting system shown in **Figure 3** cannot be used on multiple-base boilers because of physical interference of multiple rain caps.

For multiple-base boilers, pant leg venting system shown in **Figure 4** can be applied, if desired.

Vent system shown in **Figure 5** is commonly used. With vent diameters sized to match flue outlets, minimum vertical rise of 4 feet above draft-hood must be maintained for proper operation. Refer to **Chart 1** for typical chimney sizes. Requirements for this type of system are: an adequately sized chimney, adequate combustion air, and outlet end of horizontal run must be no more than 6 feet from chimney with no more than one 90° elbow in this run as shown.

For installations where required minimum 4-foot vertical rise cannot be maintained, diameter of horizontal run must be increased one inch for each foot of riser reduction. This procedure will reduce resistance of system, and if chimney is adequate boiler will vent properly.

Figure 3

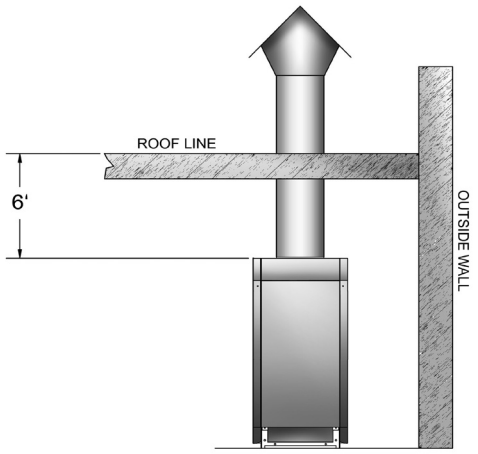

IMPORTANT: *Extend chimneys at least 2 feet above any object within radius of 15 feet, including roof.*

Figure 5

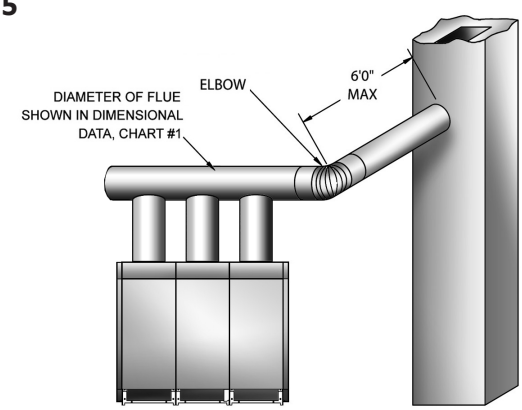

IMPORTANT: *Extend chimneys at least 2 feet above any object within radius of 15 feet, including roof.*

Figure 4

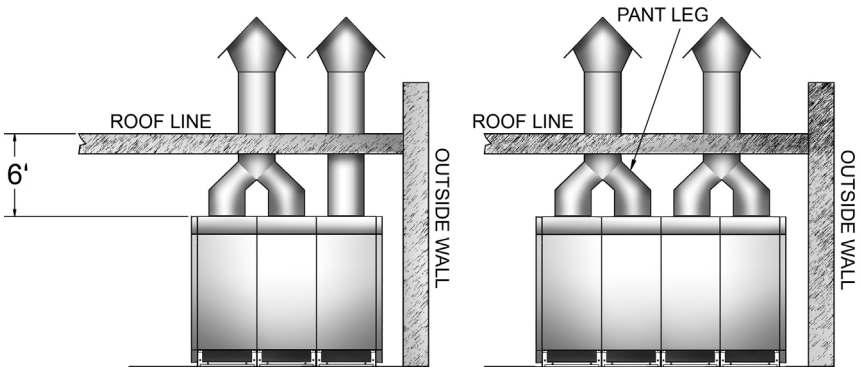

IMPORTANT: *Extend chimneys at least 2 feet above any object within radius of 15 feet, including roof.*

Figure 6

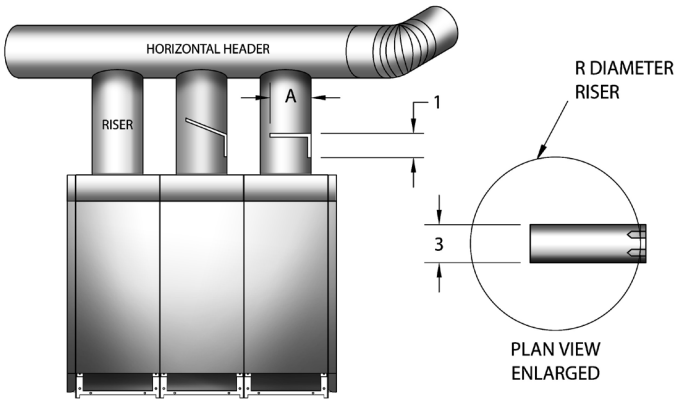

Baffle Size (Inches)			
Riser	8	10	12
A	6	8	10

Shown is suggested size of fixed baffle for different size risers.

IMPORTANT: *Extend chimneys at least 2 feet above any object within radius of 15 feet, including roof.*

Flue Connection And Venting - Continued

In certain cases where these short rises of less than 4 feet have been used, spillage of combustion products has occurred at the draft-hoods farthest from the chimney. Assuming the chimney is adequately sized, one acceptable method to correct this spillage problem is to permanently baffle the riser(s) closest to the chimney to reduce the excess of room air entering those draft-hoods. DO NOT BAFFLE ENOUGH TO CAUSE SPILLAGE. The use of fixed baffles in the short risers above the boiler draft-hood are acceptable as spelled out in American National Standard NFPA 54/ANSI Z223.1 National Fuel Gas Code, latest revision.

Fabricate these fixed baffles, using 20-gauge steel. See Figure #6. Permanently attach the baffle to the inside of the riser(s). Trial and error will dictate the degree to which each should be positioned to avoid draft-hood spillage at the far end of the boiler. Be careful to avoid bending the fixed baffle so it will obstruct the flue gas flow in the horizontal collector.

Removing Existing Boiler From Common Venting System

When existing boiler is removed from common venting system, common venting system is likely to be too large for proper venting of appliances remaining connected to it.

At time of removal of existing boiler, following steps shall be followed with each appliance remaining connected to common venting system placed in operation, while other appliances remaining connected to common venting system are not in operation.

1. Seal any unused openings in the common venting system.
2. Visually inspect the venting system for proper size and horizontal pitch and determine there is no blockage or restriction, leakage, corrosion and other deficiencies which could cause an unsafe condition.
3. Insofar as is practical, close all building doors and windows and all doors between the space in which the appliances remaining connected to the common venting system are located and other spaces of the building. Turn on clothes dryers and any appliance not connected to the common venting system. Turn on any exhaust fans, such as range hoods and bathroom exhausts, so they will operate at maximum speed. Do not operate a summer exhaust fan. Close fireplace dampers.
4. Place in operation the appliance being inspected. Follow the lighting instructions. Adjust thermostat so appliance will operate continuously.
5. Test for spillage at the draft hood relief opening after 5 minutes of main burner operation. Use the flame of a match or candle, or smoke from a cigarette, cigar or pipe.
6. After it has been determined that each appliance remaining connected to the common venting system properly vents when tested as outlined above, return doors, windows, exhaust fans, fireplace dampers and any other gas-burning appliance to their previous conditions of use.
7. Any improper operation of the common venting system should be corrected so the installation conforms with the National Fuel Gas Code, ANSI Z223.1/NFPA 54. When resizing any portion of the common venting system, the common venting system should be resized to approach the minimum size as determined using the appropriate tables in Chapter 13 of the National Fuel Gas Code, ANSI Z223.1/NFPA 54.

Front View

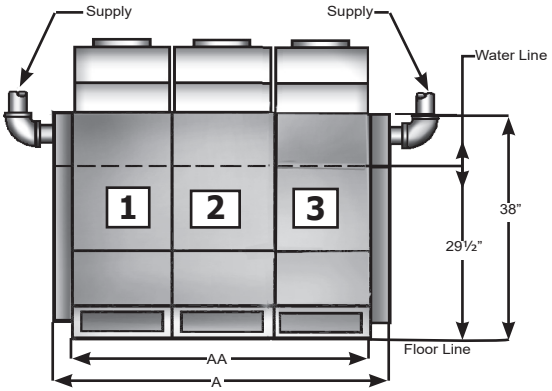

Top View

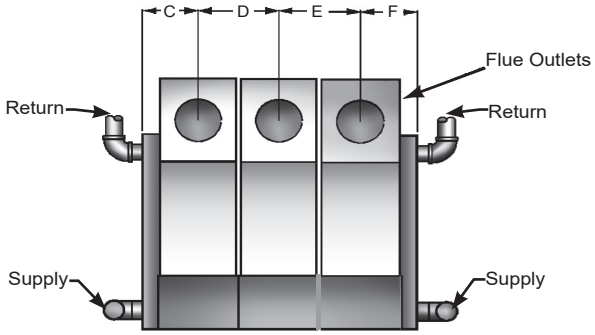

Left Side View

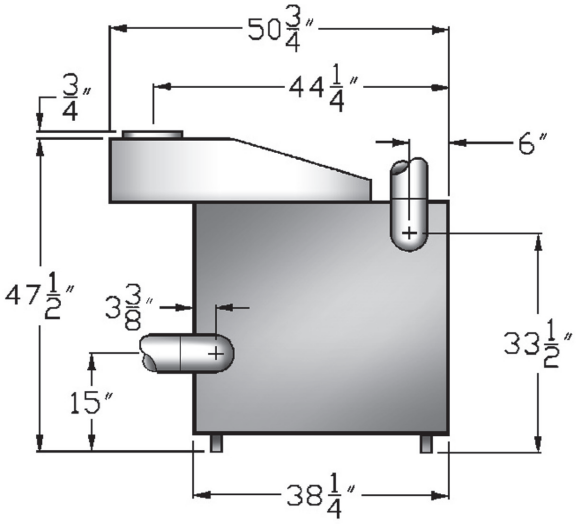

ALL SUPPLY AND RETURN CONNECTIONS ARE 4 INCH

Chart 4

Boiler Model No.	Water Content in Gallons		Shipping Weight Lbs.	A Jacket Width L to R	AA Base & Battery Length	C	D	E	F	*Boiler Modules		
	Steam	Water								*1	*2	*3
400	25	33	1133	25	21	12 1/2	–	–	12 1/2	400	x	x
500	30	40	1344	29 1/4	25 1/4	14 5/8	–	–	14 5/8	500	x	x
600	35	46	1555	33 1/2	29 1/2	10 3/8	12 3/4	–	10 3/8	300	300	x
700	40	52	1766	37 3/4	34 3/4	10 3/8	14 7/8	–	12 1/2	300	400	x
800	45	58	1977	42	38	12 1/2	17	–	12 1/2	400	400	x
900	50	65	2188	46 1/2	42 1/4	12 1/2	19 1/8	–	14 5/8	400	500	x
1000	55	71	2399	50	46 1/2	14 5/8	21 1/4	–	14 5/8	500	500	x
1100	60	78	2610	54 3/4	50 3/4	10 3/8	14 7/8	17	12 1/2	300	400	400
1200	65	84	2821	59	55	12 1/2	17	17	12 1/2	400	400	400
1300	70	91	3032	63 1/4	59 1/4	10 3/8	17	21 1/4	14 5/8	300	500	500
1400	75	97	3243	67 1/2	63 1/2	12 1/2	19 1/8	21 1/4	14 5/8	400	500	500
1500	80	104	3454	71 3/4	67 3/4	14 5/8	21 1/4	21 1/4	14 5/8	500	500	500

*** Note -** See page 14 Base Assembly

Base Assembly

300, 400 and 500 boilers are the basic models.

- 300 model has (6) burners
- 400 model has (8) burners
- 500 model has (10) burners

Combinations of basic models are used to assemble 600 through 1500 models.

Refer to **Chart 3** for proper order of assembly. When two or more bases are used to assemble boiler, verify tops of bases are even.

1. Fasten bases together with 5/16 cap bolts and nuts.

2. Insert two bolts in front posts and two in rear posts as shown in **Figure 7A** .

3. After bases are fastened, install base end panels. Install end panels before assembling sections. See **Figure 7B.**

NOTICE
Verify bases are level after assembly.

Section Assembly

4. Start sections from left or right end of base.

5. Place end section on base with center-line of section directly over joint of base end closure.

6. With boilers having two or more bases, as you progress be sure parting line (center-line of section) of intermediate sections fall on junction of two bases. See **Figure 8.**

Figure 7A

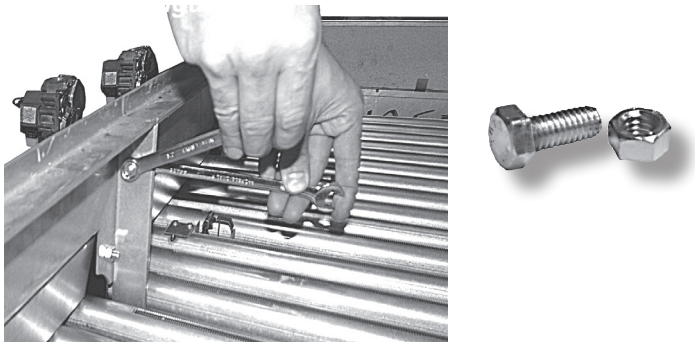

Figure 7B

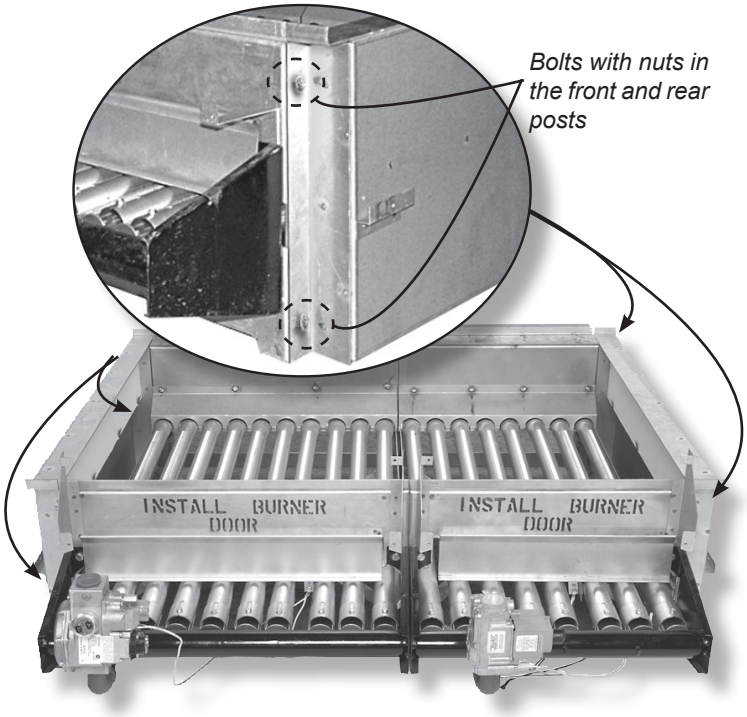

Figure 8

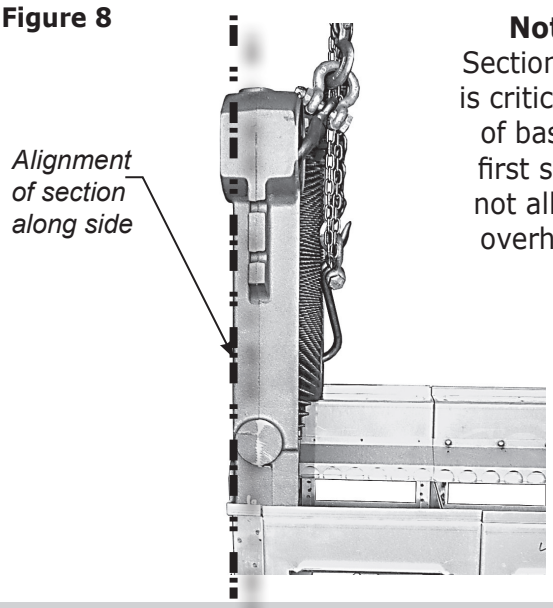

Note: First Section Alignment is critical. Use side of base to align first section. Do not allow side to overhang base.

7. When starting section assembly, clean nipples and nipple ports.

8. Coat nipples and nipple ports with Hercules Grrip or other good sealant. See **Figure 9.**

9. Place nipples in ports. Take care to seat them squarely to prevent cocking. **Figure 10.**

10. When pulling sections together with tie rods, insert tie rods in holes nearest to nipple ports. Move tie rods to proper location, if necessary, only after sections are fully pulled together. See insert Figure 11.

11. Oil or lubricate threads, insert rods in lugs with washers under nuts and tighten uniformly and evenly so that sections are pulled parallel as they go together. Tighten bolts by hand to 30-40 Ft-lbs each. Do not overtighten. Do not use an impact wrench. When all sections are pulled up, locate tie rods in alternating pairs of upper and lower holes between adjacent sections. See **Figure 11.**

12. Be sure both ends of completed section assembly are resting evenly on both ends of base.

13. Apply furnace cement at joints of sections front, top and back. Apply furnace cement where sections join the base. See **Figure 12.**

14. Place necessary plugs and control wells in correct locations. See **Figure 31** page 24.

A. Plug all other tappings, leaving air vent in top of one of end sections, and connect water.

B. Fill boiler with water until it runs out air vent. See **Figure 31** port D page 24.

C. Hydrostatically test boiler in accordance with applicable codes.

D. Check for leaks before continuing with assembly.

E. Drain and remove unnecessary plugs.

Figure 9

Figure 10

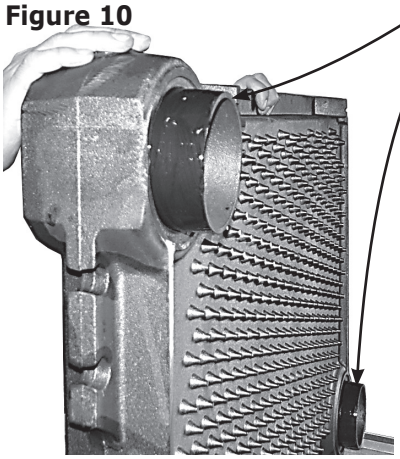

Figure 11

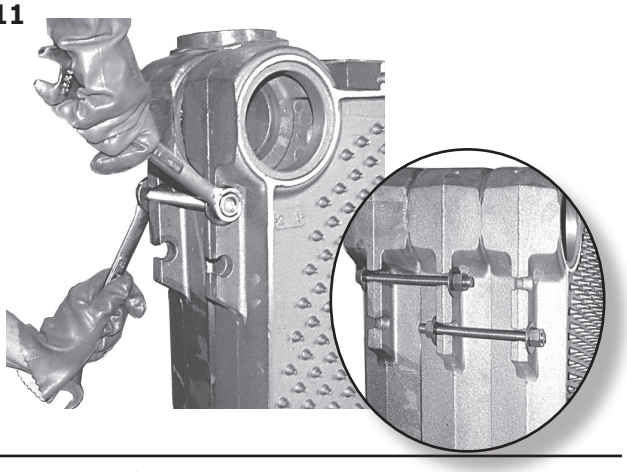

Figure 12

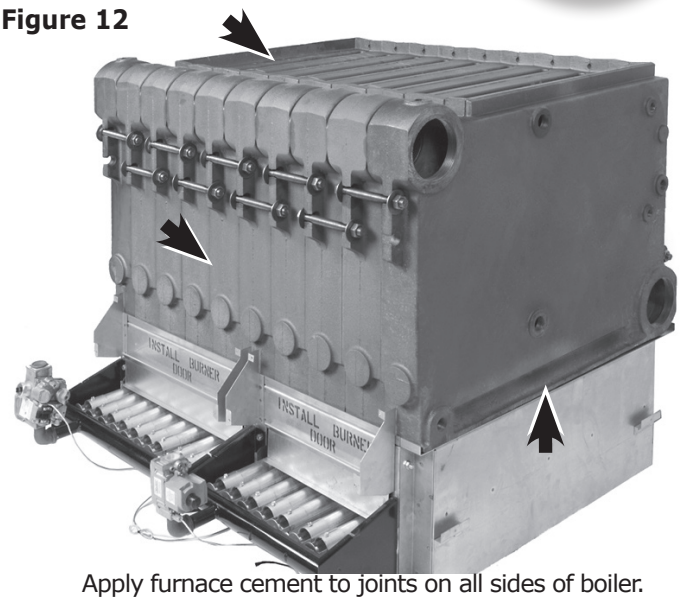

Apply furnace cement to joints on all sides of boiler.

Attaching Draft Hoods

1. Attach draft hoods to boiler sections after applying boiler furnace cement to top of boiler sections where hoods and sections meet.

2. Use J-bolts to attach front of draft hoods to slots in section flanges. See **Figure 13.**

Figure 13

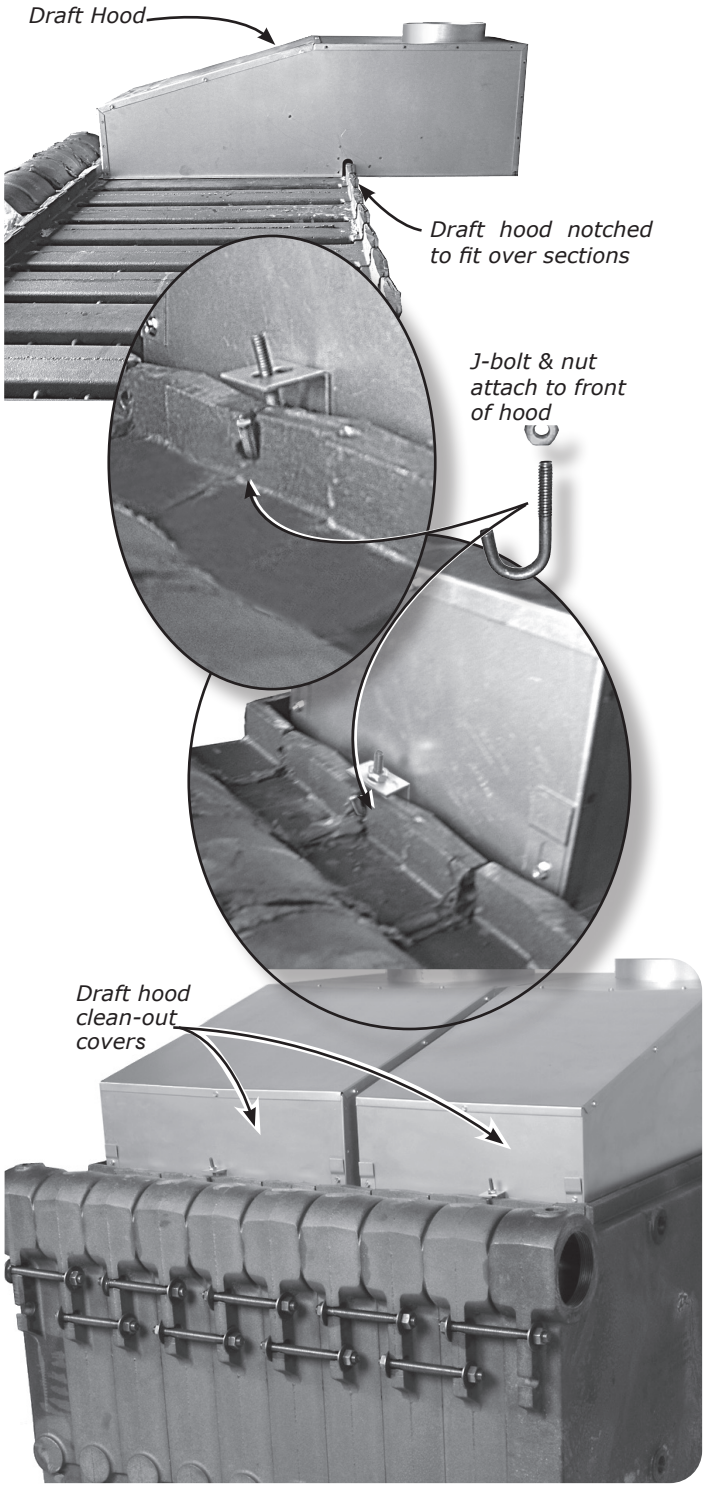

Installing Boiler Jacket Panels

NOTICE
Start jacket assembly at left side.

1. Attach lower jacket end panel (left) to two Z-bars on base end closures through two slotted holes on bottom of jacket end panel. Use (2) #10 x ½" screws. See **Figure 14**.

Figure 14

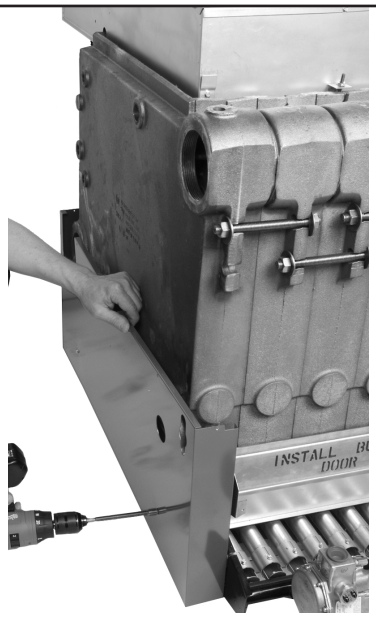

2. Attach middle jacket end panel (left) to lower jacket end panel with middle laying over lower. Line up holes. Use (5) #10 x ½" screws. See **Figure 15.**

Figure 15

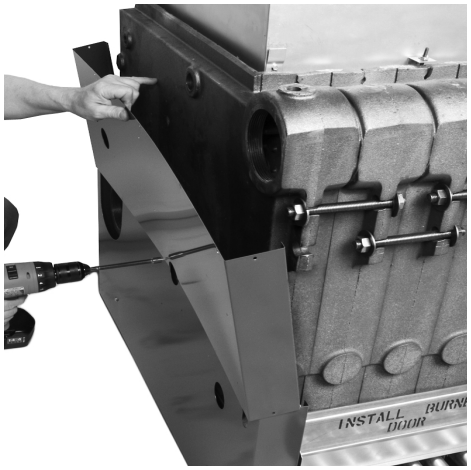

3. Attach upper jacket end panel (left) to middle jacket end panel with upper behind middle. Line up holes. Use (6) #10 x ½" screws. Ensure bare metal plate is inserted between casting ridge and draft hood. This holds panel in place. See **Figure 16.**

Figure 16

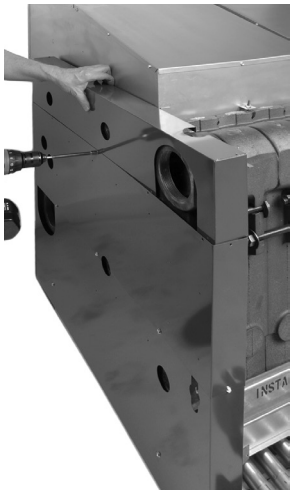

4. Position top/front intermediate panel so back edge of top hangs on adjustable clips on front of draft hood(s);

A. Left edge hangs on bracket on left upper jacket end panel,

B. Right edge with integral bracket hangs on tie rod(s).

See **Figure 17.**

Figure 17

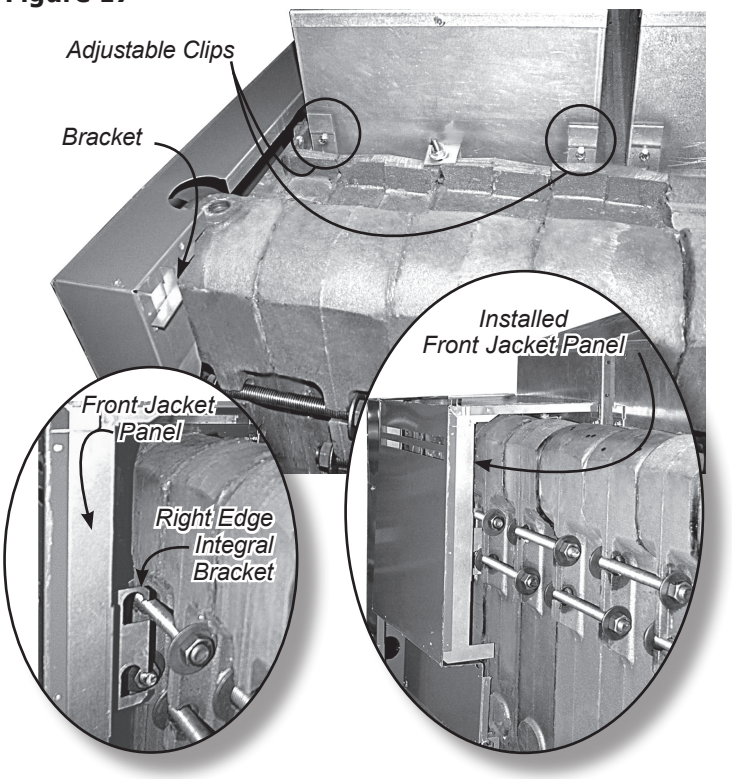

5. Attach top/front intermediate panel to lower base brackets through four slotted holes in panel. Use (4) #10 x ½" screws. See **Figure 18.**

6. On multiple base boilers, each additional top/front intermediate panel attaches in same way (working your way from left to right). **Figure 18.**

Figure 18

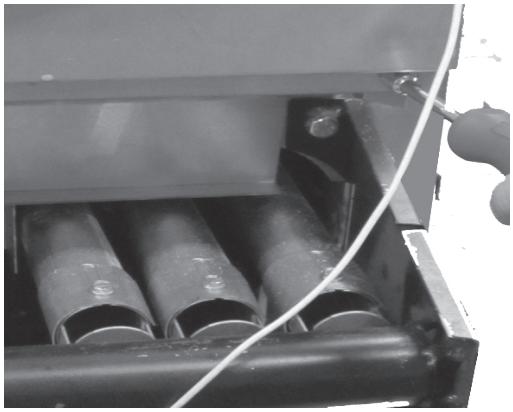

NOTICE

Manufacture recommends assembling jacket panels after piping is completed. Skip step 7 proceed to step 8.

7. Attach upper jacket end panel (right) so left edge hangs on bracket on top/front intermediate panel. Insert bare metal plate in same manner as left panel. See **Figure 19.**

Figure 19

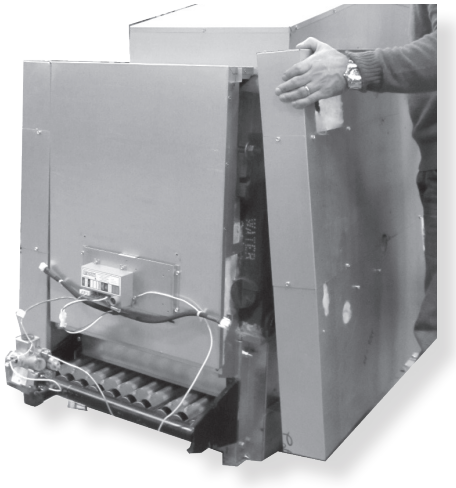

A. Attach side panel to base bracket through to slotted holes. See **Figure 20**

Figure 20

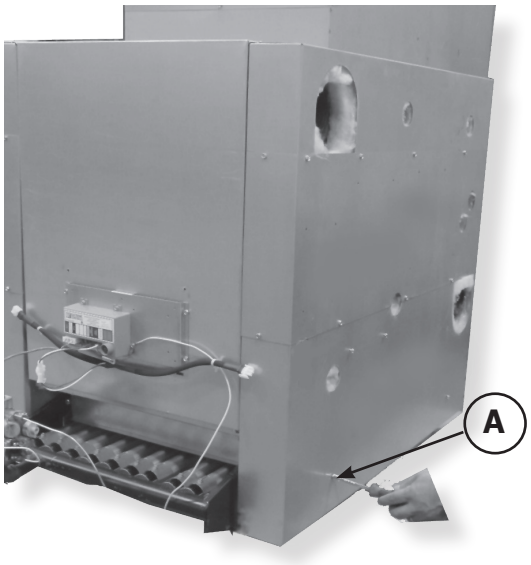

B. For added support attach side panel to draft hood. See **Figure 21**. Drill a hole or use a self tapping screw where bracket on jacket meets the draft hood.

Figure 21

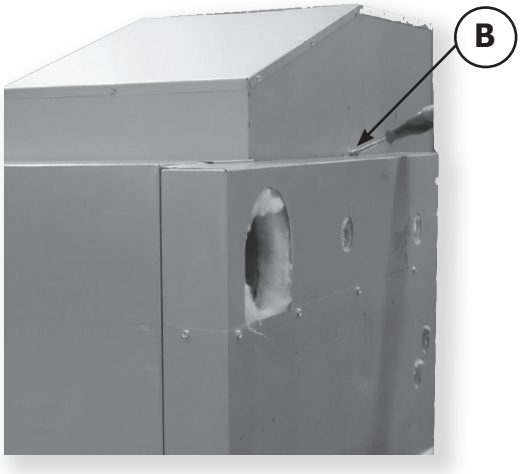

If boiler piping is preassembled jacket can be assembled as follows. **See Figures 22A and 22B.**

8. Attach middle jacket end panel (right) to upper jacket end panel with middle laying over upper. Line up holes. Use (6) #10 x ½″ screws. See **Figure 22A.**

9. Attach lower jacket end panel (right) to middle jacket end panel with lower behind middle. Line up holes. Use (5) #10 x ½″ screws.

Figure 22A

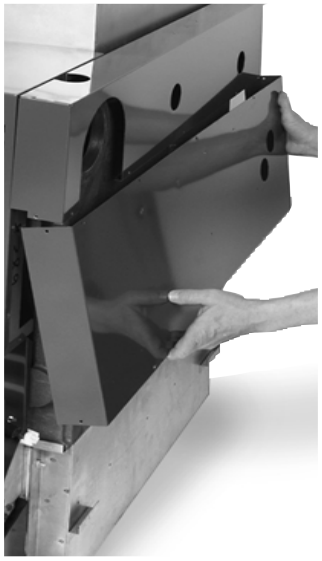

10. Attach lower jacket end panel to two Z-bars on base end closures through two slotted holes on bottom of jacket end panel. Use (2) #10 x ½″ screws. See **Figure 22B.**

Figure 22B

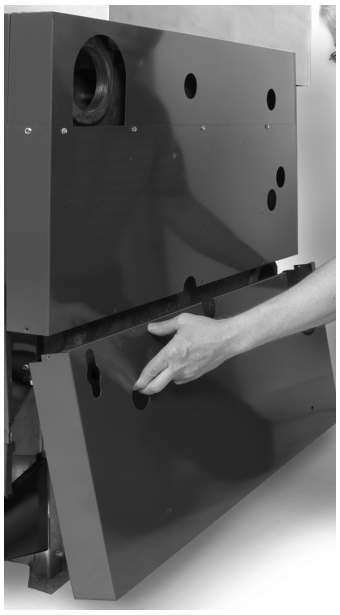

11. Position top of rear jacket panel(s) to draft hood baffle flange. Secure with (2) #10 x ½″ screws. Secure bottom of rear jacket panel(s) to bracket(s) on boiler base using (2) #10 x ½″ screws. See **Figure 23.**

Figure 23

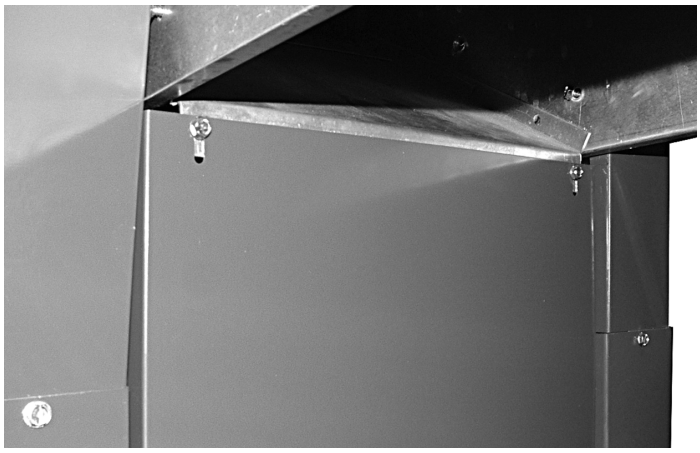

12. Attach burner door knobs with #8-32 x ¼" screws and #8-32 hex nuts.

13. Slide bottom of lower access door(s) in slots on top of manifold brackets. See **Figure 24.**

Figure 24

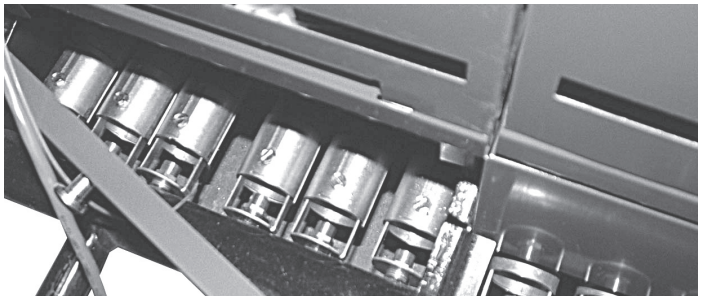

14. Attach control panel to front jacket. Use (2) #10 x ½" screws. See **Figure 25**.

Figure 25

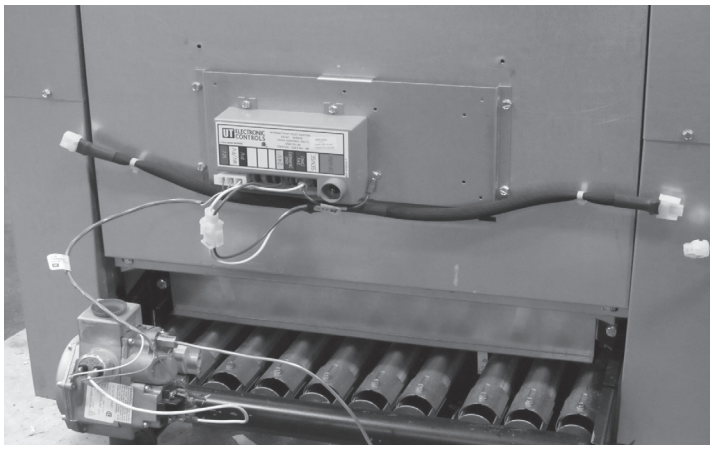

Control Mounting And Installation

Electrical controls, J-box, etc. can be mounted on either left or right jacket end panel.

Boiler safeties (LWCO, etc.) and respective piping must be mounted on opposite end of boiler electrical controls.

15. Attach J-box assembly to jacket end panel. Align with holes in end panel. Use (4) #10 x ½" screws. See **Figure 26.**

Figure 26

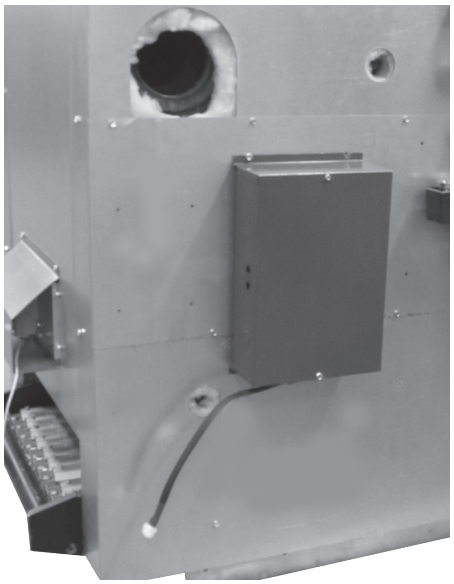

16. Attach control panel to front jacket panel align with predrilled holes. Use (4) #10 x ½" screws. Secure harness to control panel with zip-ties. Attach wire clips to side and front panels (3). Route wires through clips. See **Figure 27A.**

Figure 27A

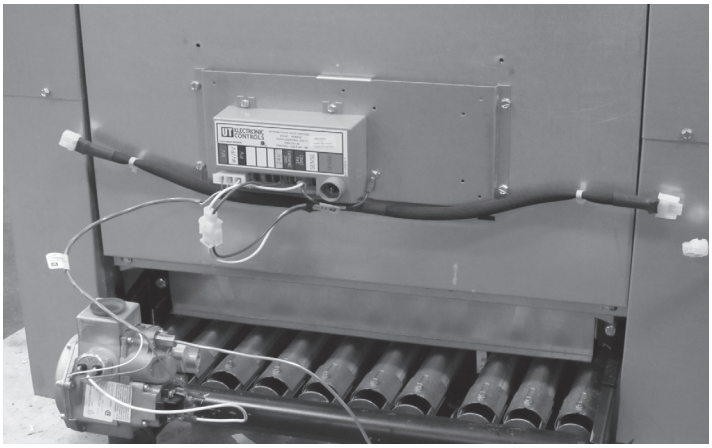

17. Orient harness of control panel assembly so correct (female) plug is toward J-box and will connect to J-box harness. See **Figure 27B**.

18. Connect plugs on harnesses. See **Figure 27B.**

Figure 27B

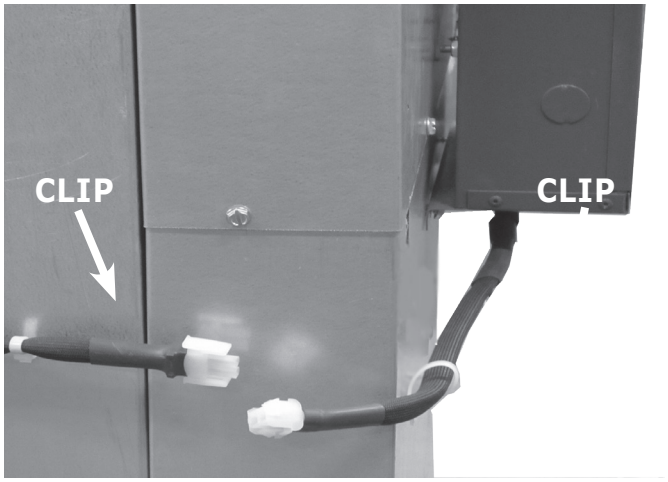

19. Position control access jacket panel(s) so tabs slide into slots on top/front intermediate jacket panel(s). See **Figure 28A**.

Figure 28A

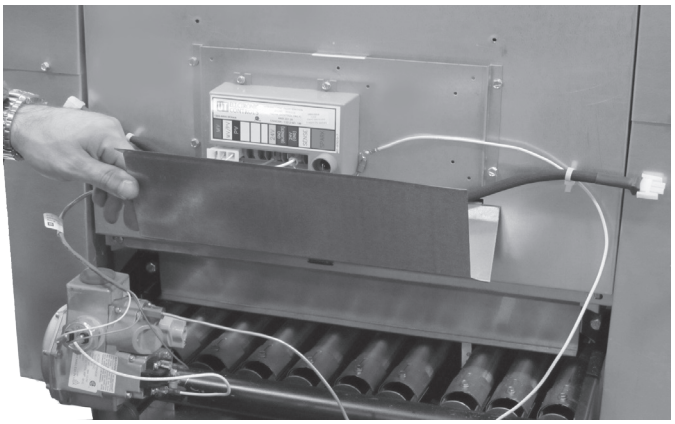

20. Attach control access jacket panel to front jacket. Use (2) #10 x ½" screws. See **Figure 28B.**

21. Connect pilot spark wire after control panel installation. See Figure **29.**

22. Each boiler base includes:
- Factory installed lighting Instruction Labels.
- Factory installed Data plate indicating required gas type, firing rate, and gas pressure for that base. These plates are located on Jacket Top/Front Panels.
- Field installed rating plate showing total Input and Output Ratings. Rating plate is shipped in AC Carton and is to be mounted on side Jacket End Panel by installing contractor.

23. Attach any Local Code Label, not provided by manufacturer, to boiler.

24. Connect plugs on harnesses. See **Figure 30.**

25. On multiple base boilers, mount remaining control panels to intermediate jacket panels following steps 4 & 5.

26. On each base, connect gas valve harness. **Refer to Wiring Diagram page 30.**

Figure 28B

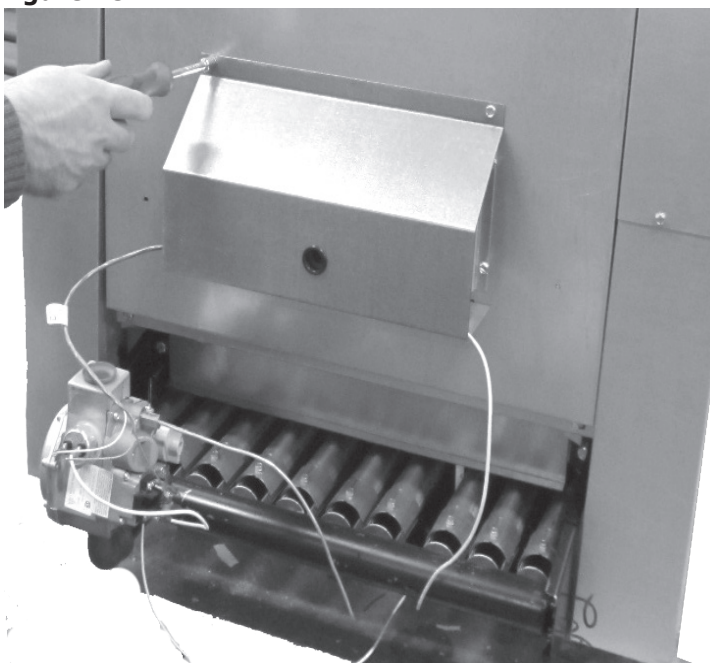

NOTE: *Attachment of control access jacket panel can wait until controls have been mounted to front jacket panel.*

Figure 29

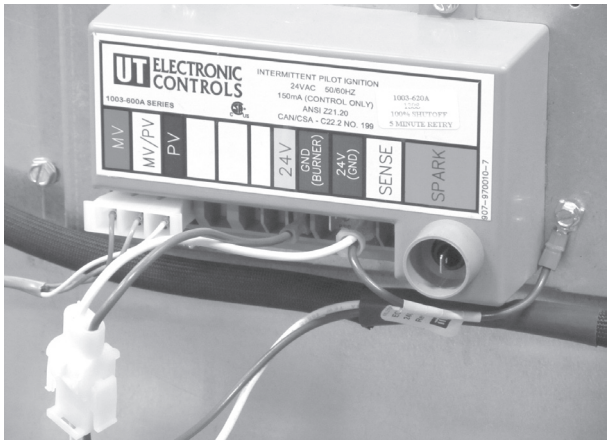

Figure 30

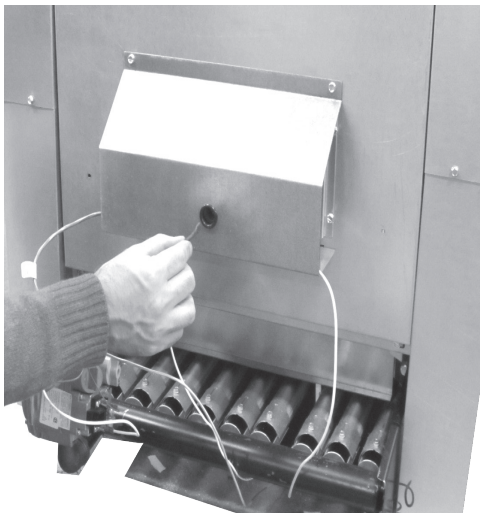

Figure 31 shows end section and provided tappings. Tappings are same in both right and left end sections.

OPENING	SIZE	STEAM	WATER
A	4″	Supply and Return	Supply and Return
B	½″	Primary LWCO and Gauge Glass Set	Plugged
C	¾″	Drain, Left End	Drain, Left End
C	¾″	Drain, Right End	Drain, Right End
D	½″	Plugged	Limit Control
E	1″	Accessories	Accessories
*F	1″	Safety Valve	Safety Valve
G	¾″	Plugged or Electronic (Probe Type) LWCO	Plugged

***If using opening F** for other than Safety Valve or Safety Relief Valve, or Safety/Relief valve is larger than 1″, Install Safety/Relief Valve in Header Piping as near boiler as possible.

BOILER TRIM

Following controls are supplied as standard equipment. Details of their function and operation will be found in section on Checking and Adjustments page 33.

WATER TRIM

1. Water temperature high limit control
2. Combination temperature - pressure gauge
3. Safety relief valve (30 psi)

WATER TRIM ASSEMBLY

Locate water trim controls per chart and illustration above.

STEAM TRIM

1. Low Water Cut-Off (mounted externally) with blow-off valve
2. High Pressure Limit Control
3. Pressure Gauge
4. Water Gauge Glass Set
5. Siphon Loop
6. Safety Valve 15 psi. See page 27 for installation location.

STEAM TRIM ASSEMBLY

Field assemble Steam Trim, Low Water Cut-Off, High Pressure Limit Control, Pressure Gauge, Water Gauge Glass Set and Siphon Loop, as shown in **Figure 32.** See **Figure 31** and Chart above for location of controls.

NOTICE

Do not place any shutoff between pressure relief valve and boiler, or on discharge pipes between such safety valves and atmosphere. Installation of pressure relief valve shall conform to requirements of ANSI/ASME Boiler and Pressure Vessel Code, Section IV.

Figure 31

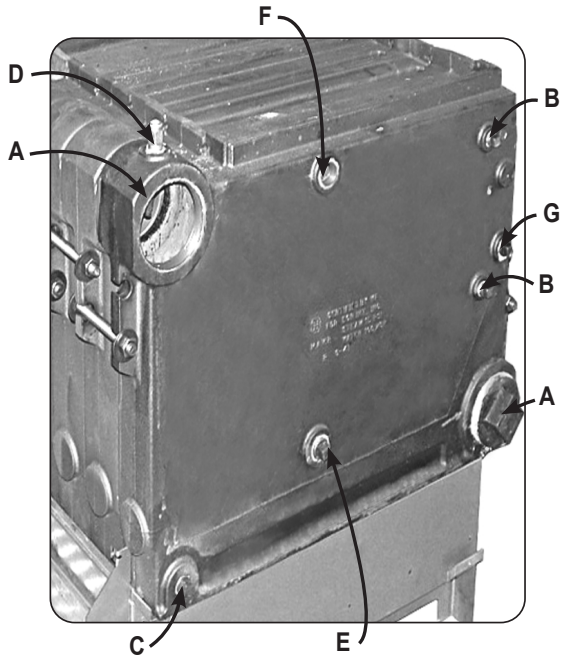

Figure 32

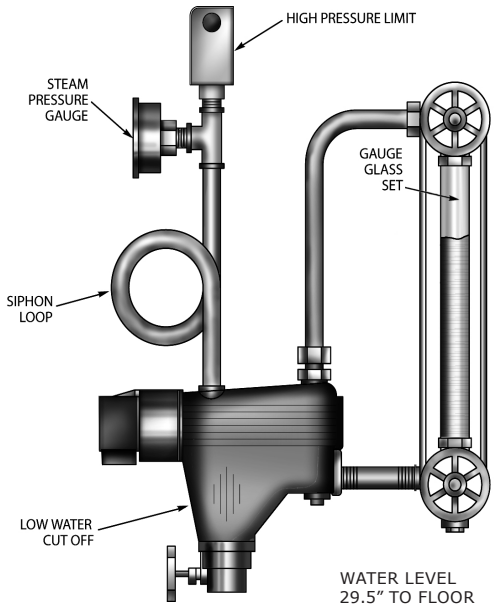

Field Assembled

Figure 33 - Boiler Tappings

STEAM BOILERS - SERIES S
BOILER TAPPINGS ARE AVAILABLE FOR ALL CONNECTIONS SHOWN

NOTE: *Mount electrical supply on opposite side.*

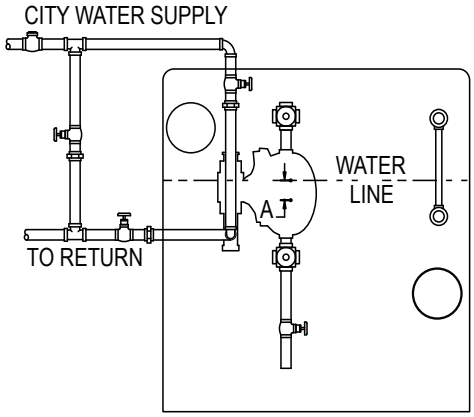

McDONNELL FEEDER CUTOFF COMBINATION

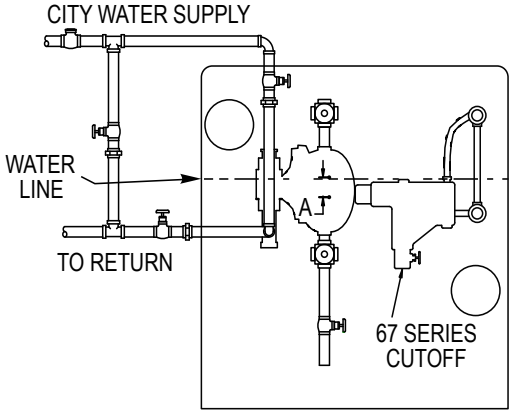

SEPARATE McDONNEL FEEDER AND SEPARATE McDONNEL LOW-WATER CUTOFF

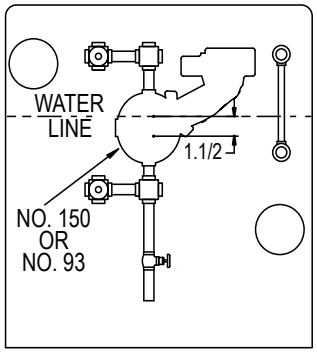

McDONNELL PUMP CONTROL AND LOW-WATER CUTOFF USED WITH CONDENSATE RECEIVER AND ELECTRIC BOILER FEED PUMP

BOILER SIZE	USE
400 THRU 1500	No. 47-2* Control Mounts in Gauge Glass Tappings
NOTE: For multiple boiler installation with gravity return, use feeder Cutoff Combination or separate feeder and separate cutoff on each boiler.	

FOR CLOSED HEATING SYSTEMS
DIMENSION A = 2 • 2 ½

BOILER SIZE	USE
400 THRU 1500	No. 247 mechanical feeder or No. 101-24V electric feeder with transformer - for use on closed heating systems only.
NOTE: For multiple installation with condensate tank and single boiler feed pump, use No. 93 on each boiler to operate motorized valve in each boiler feed line.	

***These items available through your Distributor.**

FOR CLOSED HEATING SYSTEMS
DIMENSION A - 2 = 2 ½ inches

FOR PROCESS OR PARTIAL PROCESS SYSTEMS
DIMENSION A - 1 = 1 ½ inches

Figure 34

WATER BOILERS - SERIES W
BOILER TAPPINGS ARE AVAILABLE FOR ALL CONNECTIONS SHOWN WITH EXCEPTION OF NO. 764 WHICH MOUNTS IN PIPING

NOTE: *Mount electrical supply on opposite side.*

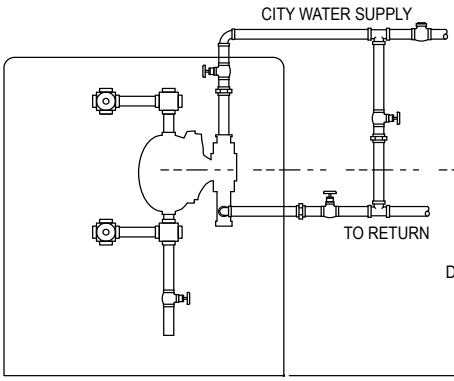

McDONNELL FEEDER CUT-OFF COMBINATION

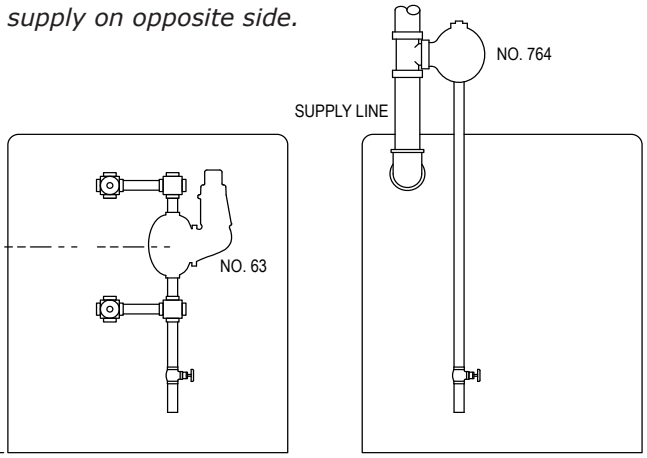

McDONNELL LOW-WATER CUT-OFF

For boilers with up to 75-psi relief valve setting**	
BOILER SIZE	**USE**
ALL SIZES	No. 53-2

For boilers with 30-psi relief valve setting	
BOILER SIZE	**USE**
400 THRU 1500	No. 247-2

For boilers with 75-to 100-psi relief valve setting	
BOILER SIZE	**USE**
ALL SIZES	No. 150

For all boilers up to 50-psi relief valve setting	
BOILER SIZE	**USE**
ALL SIZES	No. 63*
ALL SIZES	NO. 764*

***These items available through your Distributor.**

**** Water supply pressure must exceed relief valve setting by at least 20 psi.**

Figure 35

STEAM BOILER PIPING

Note: Single Main Riser May Be Used.

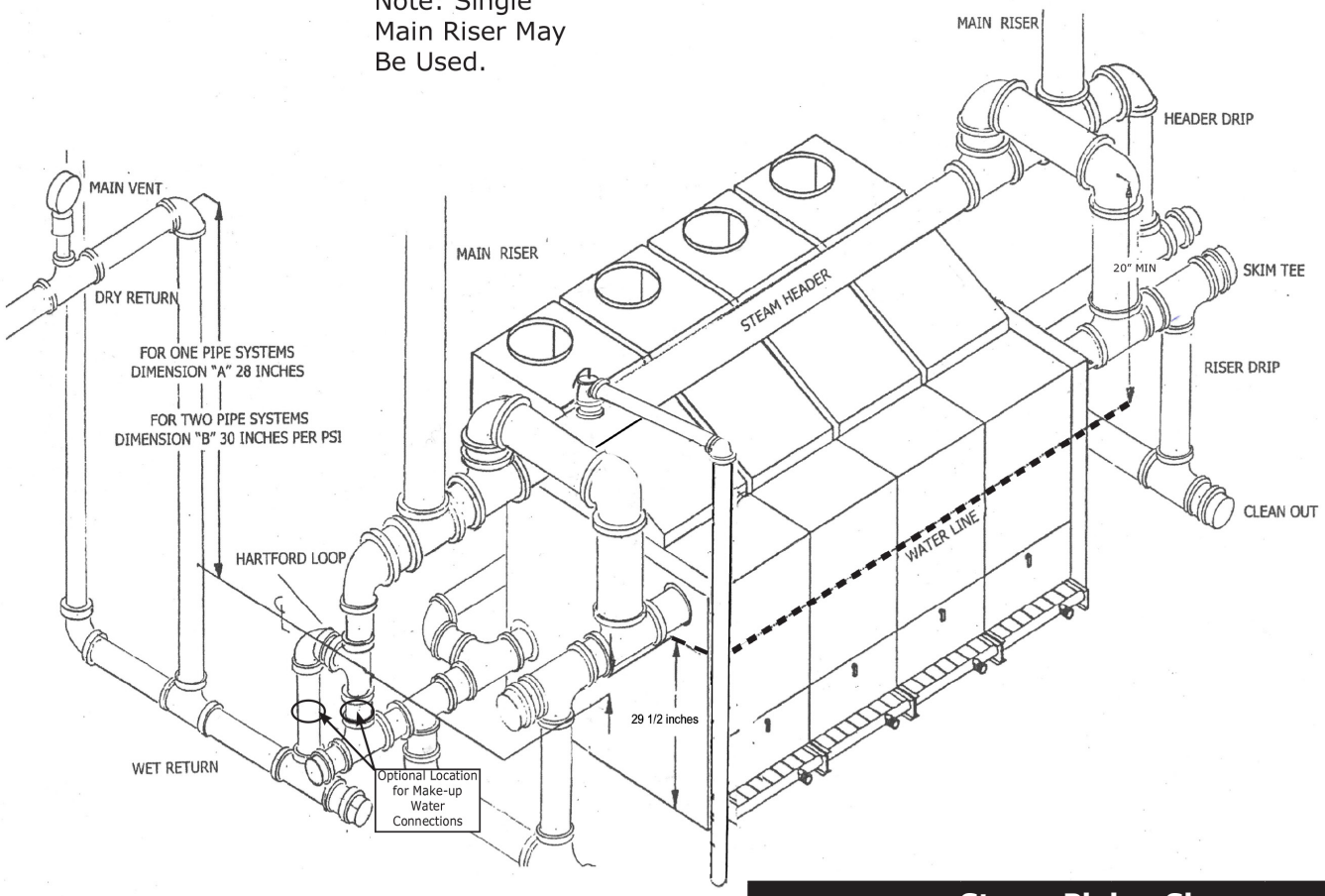

⚠ WARNING

Do not install shut-off or steam valve between safety valve and boiler.

Install Safety Valve As Close To Boiler As Possible

STEAM BOILER PIPING **See Figure 35**

- Full size steam header is recommended by manufacture on all steam systems as shown above.
- Risers should be full 4" and at least 20" in height. Use skimmer tee as shown.
- Area of Main Steam Cross Header Pipe should be equal to or larger than total area of Steam Supply Mains leading from Header and should never be smaller than Supply tappings on Boiler. Return Header should be piped to both ends of Boiler. Area of Return Header should be equal to total area of Return Mains or larger.
- Pipe steam cross headers with swing joints, or equipped with slip joint connector, to prevent expansion and contraction of steam header from damaging boiler.
- Each installation has preferred piping arrangement according to system requirements. Installer's heating engineer or using standard engineering practice choice of arrangements and sizes of headers should be decided.

Steam Piping Size

Model	Header	Riser	Equalizer
400 to 900	4"	4"	2"
1000 to 1200	4"	4"	2 ½"
1300 to 1500	4"	4"	3"

Excessive Make-Up Water

A leaky system will increase the volume of make-up water supplied to the boiler, which can significantly shorten the life of the boiler.

Make-up water contains dissolved minerals, salts, and oxygen. When fresh, cool make-up water is heated in the boiler, minerals fall out as sediment. Salts coat the inside of the boiler, and oxygen escapes as a gas.

The accumulation of sediment eventually isolates water from contacting the cast iron. When this happens the cast iron in that area gets extremely hot and eventually cracks.

The presence of free oxygen or chloride salts in the boiler corrodes the cast iron from the inside. More make-up water and higher concentrations of contaminants damage the boiler and shorten the boiler's service life.

WATER QUALITY

- Do not use softened water in steam boilers. Accelerated boiler corrosion will result.
- Consult local water treatment companies for unusually hard water area (above 7 grains hardness) or low pH water conditions. Boiler water pH of 7 to 8.5 is manufacturer recommended.

BOILERS USED WITH REFRIGERATION SYSTEM

When the boiler is installed in connection with a refrigeration system, it must be piped so that the chilled medium is piped in parallel with the heating boiler with appropriate valves to prevent the chilled medium from entering the heating system. An example of such piping is shown in **Figure 36,** Valve A and B open for heating, closed for cooling. Valves C and D closed for heating, open for cooling.

When hot water boilers are connected to heating coils located in air handling units where they may be exposed to refrigerated air circulation on the boiler piping, the boiler piping system shall be equipped with flow control valves or other automatic means to prevent gravity circulation of the boiler water during the cooling cycle.

WATER BOILER PIPING **Figure 37**

Supply and return connections to the hot water boiler should be located so that the water will thoroughly circulate throughout the entire boiler. Each installation has a preferred piping arrangement according to the requirements of the particular system and choice of arrangements and sizes of headers should be decided upon by the installer's heating engineer or with standard engineering practice. When using only one supply and one return connection, return must be connected at opposite end of boiler from flow connection, on all boilers 600,000 Btu/hr input and larger.

HIGH LIMIT

The immersion well for the high limit control must be mounted at flow outlet of boiler. This may be either right or left hand. The temperature and pressure gages should be mounted at the outlet as well, and may be the opposite and of the high limit control.

PIPE SIZING

Piping connection sizes are important to control proper water velocity at the inlet and outlet connections to the water boiler. It is recommended that the following pipe sizes be used for flow rates shown and that the boiler being headered to tappings at both ends, where one pipe connection will not be adequate to hold water velocities below 3.33 feet per second.

FLOW RATE GPM	PIPE SIZE
35 - 50	2½"
51 - 76	3"
77 - 131	4"
132 - 205	5"
206 - 300	6"

Figure 36

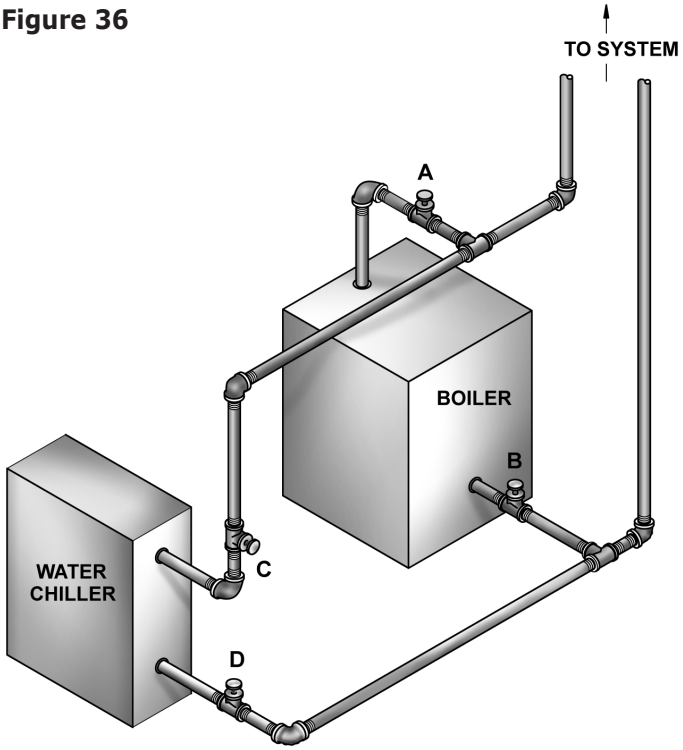

Figure 37

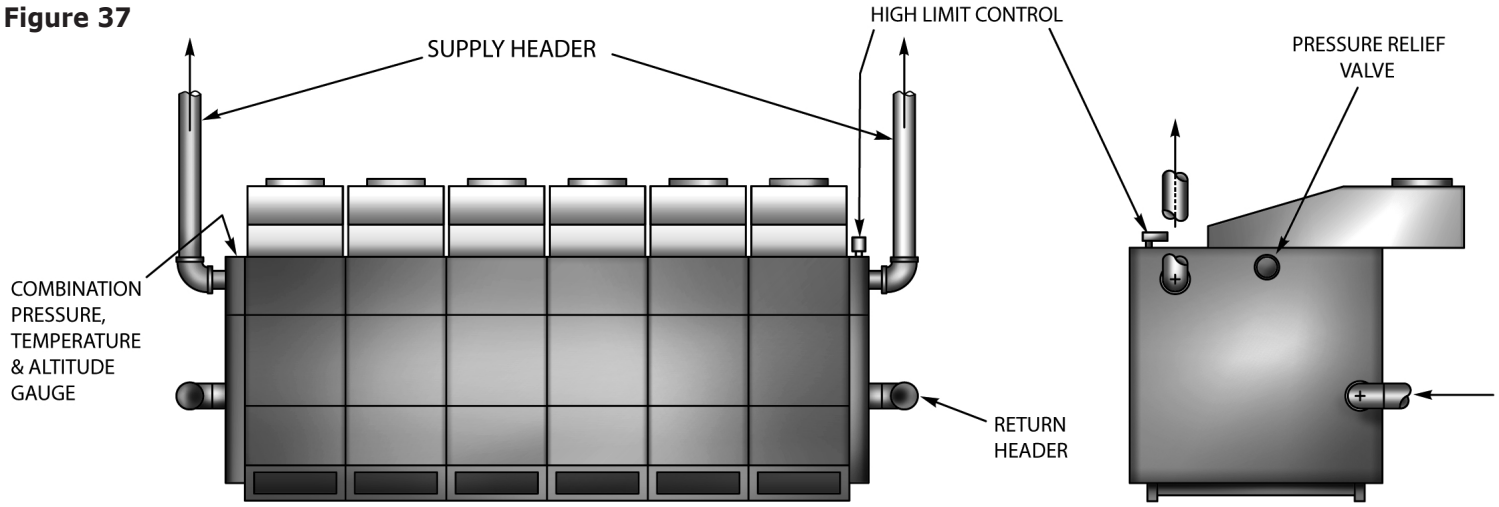

Figure 38

MULTIPLE STEAM BOILER PIPING - GRAVITY RETURN

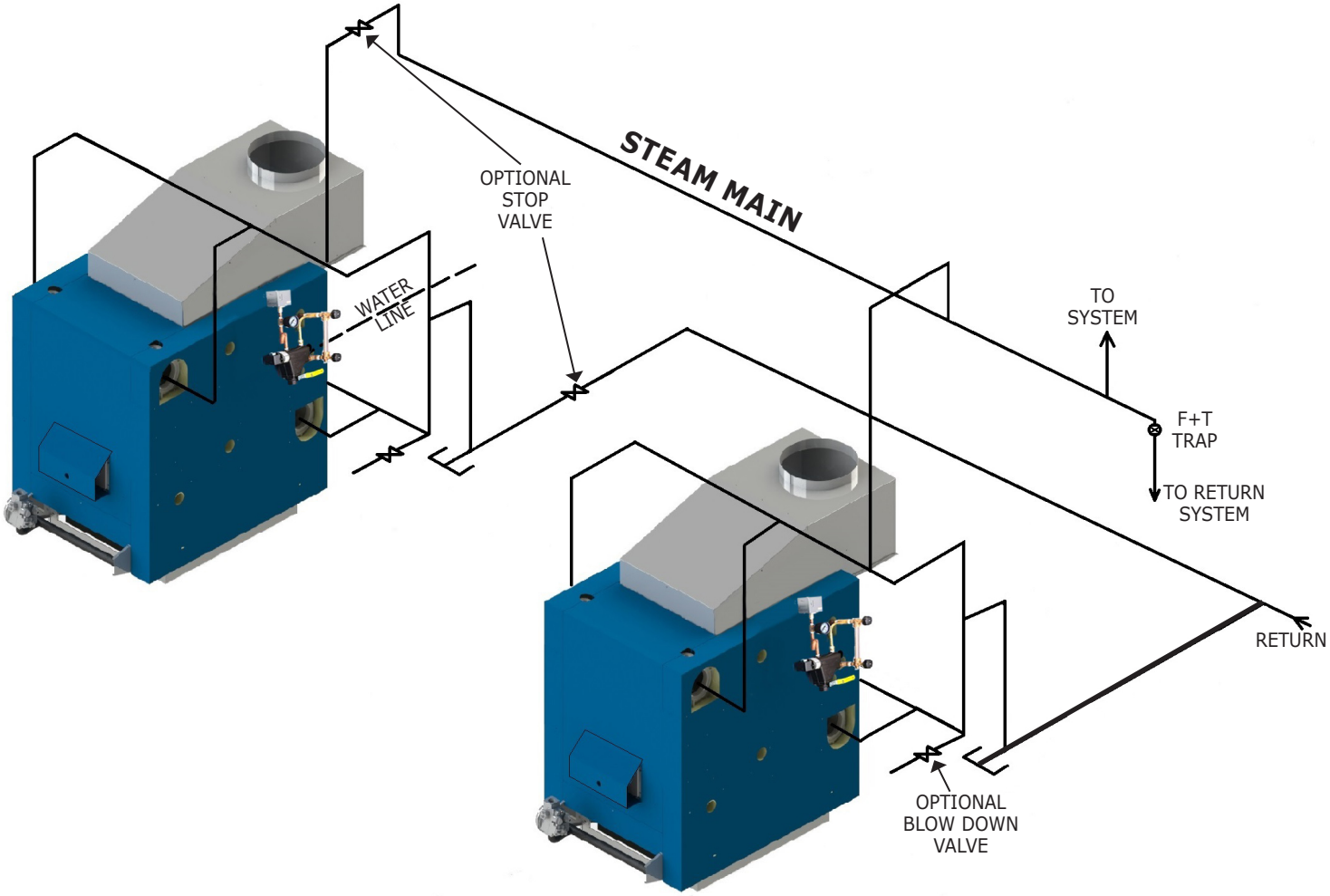

⚠ CAUTION

WHAT TO DO IF YOU SMELL GAS

- Do not try to light any appliance.
- Do not touch any electrical switch; do not use any phone in your building.
- Immediately call your gas supplier from a neighbor's phone. Follow gas supplier's instructions.
- If you cannot reach your gas supplier, call the fire department.

⚠ DANGER

Fire Hazard. Do not use matches, candles, open flames, or other methods providing ignition source. Failure to comply will result in death or serious injury.

Gas Supply Connection, Natural Gas Only

1. Use piping materials and joining methods acceptable to authority having jurisdiction. In absence of such requirements USA - National Fuel Gas Code, ANSI Z223.1/NFPA 54
2. On multiple base boilers, connect gas service with branch lines from common main.
3. Install ground joint union in each branch line for easy servicing of gas controls.
4. Provide sediment trap up stream of gas valve. **Figure 39**.
5. Size and install gas piping system to provide sufficient gas supply to meet maximum input at not less than minimum supply pressure. See **Chart 6** for pipe sizes for gas mains.
6. Pressure test boiler and gas connection before placing boiler in operation.
   - Pressure test over 1/2 psig (3.5 kPa). Disconnect boiler and its individual gas shutoff valve from gas supply system.
   - Pressure test at 1/2 psig (3.5 kPa) or less. Isolate boiler from gas supply system by closing manual gas shutoff valve.
   - Locate leakage using gas detector, noncorrosive detection fluid, or other leak detection method acceptable to authority having jurisdiction. Do not use matches, candles, open flames, or other methods that can provide ignition source.
   - Correct leaks immediately and retest.

Chart 5

Minimum Operating Gas Supply Pressure							
Models	***5.0 inches w.c.***						
		500	600	1000	1300	1500	
Models	***5.3 inches w.c.***						
	400	700	800	900	1100	1200	1400
All Models	**Maximum Gas Supply Pressure**						
	13.5 inches w.c.						
All Models	**Manifold Pressure**						
	3.5 inches w.c.						

Chart 6

TABLE OF PIPE SIZES IN INCHES FOR GAS MAINS (NATURAL GAS)

Boiler No	20′	30′	40′	50′	60′	80′	100′	125′	150′
400	1¼	1¼	1¼	1¼	1½	1½	1½	1½	2
500	1¼	1¼	1¼	1½	1½	1½	2	2	2
600	1¼	1½	1½	1½	2	2	2	2	2
700	1¼	1½	1½	2	2	2	2	2	2½
800	1½	1½	2	2	2	2	2	2½	2½
900	1½	2	2	2	2	2	2½	2½	2½
1000	1½	2	2	2	2	2½	2½	2½	2½
1100	2	2	2	2	2	2½	2½	2½	2½
1200	2	2	2	2	2½	2½	2½	2½	3
1300	2	2	2	2½	2½	2½	2½	3	3
1400	2	2	2	2½	2½	2½	3	3	3
1500	2	2	2½	2½	2½	2½	3	3	3

Figure 39

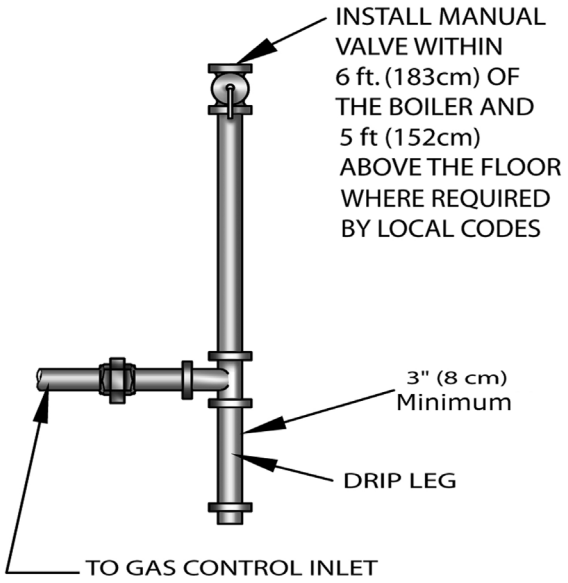

⚠WARNING

Electrical shock hazard. Turn OFF electrical power supply at service panel before making any line voltage connections. Failure to do so could result in death or serious injury.

⚠CAUTION

Label all wires prior to disconnection when servicing controls. Wiring errors can cause improper and dangerous operation.

Electrical Wiring

1. Electrically bond boiler to ground in accordance with requirements of authority having jurisdiction. Refer to National Electrical Code, ANSI/NFPA 70.
2. Install fused disconnect switch between boiler and electrical panel in convenient location.
3. Secure wiring from high temperature limit control to boiler jacket or gas piping to prevent accidental disconnect from controls.
4. Tape all wiring to gas valves securely to gas supply lines or run in appropriate conduit.

Thermostat Installation

1. Follow instructions included with your thermostat.
2. Locate thermostat about 5 feet above floor on inside wall.
3. Keep thermostat(s) at desired room temperature. If windows are opened or heat is not needed, set thermostat(s) to lower setting.

PLACES TO AVOID LOCATING THERMOSTAT	
Dead Spots	Behind Doors
	Corners and Alcoves
Hot Spots	Concealed Pipes
	Fireplaces
	TV Sets
	Lamps
	Direct Sunlight
	Kitchens
Cold Spots	Concealed Pipes or Ducts
	Stairwells
	Drafts
	Unheated Rooms on other side of Wall

Adjust Thermostat Heat Anticipator

1. Set heat anticipator setting per thermostat manufacture instructions.
2. Follow thermostat manufacture instructions for final adjustment.
3. When set above temperature indicated on thermometer, boiler burners should ignite. Verify thermostat(s) turns boiler off when room temperature reaches selected setting and starts boiler when room temperature falls few degrees.
4. Set thermostat for desired temperature.

Commercial Boiler, 1, 2 & 3 Base

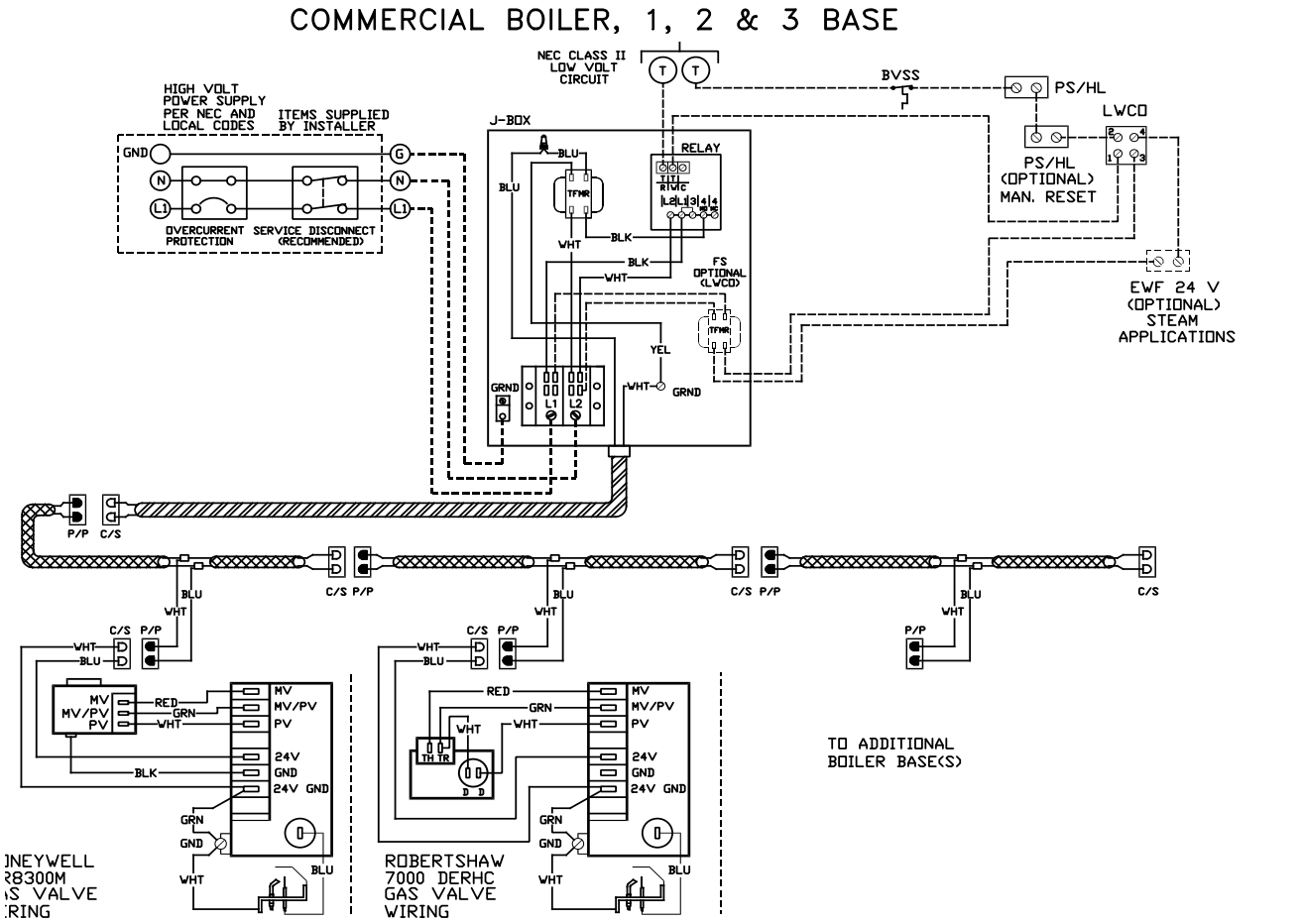

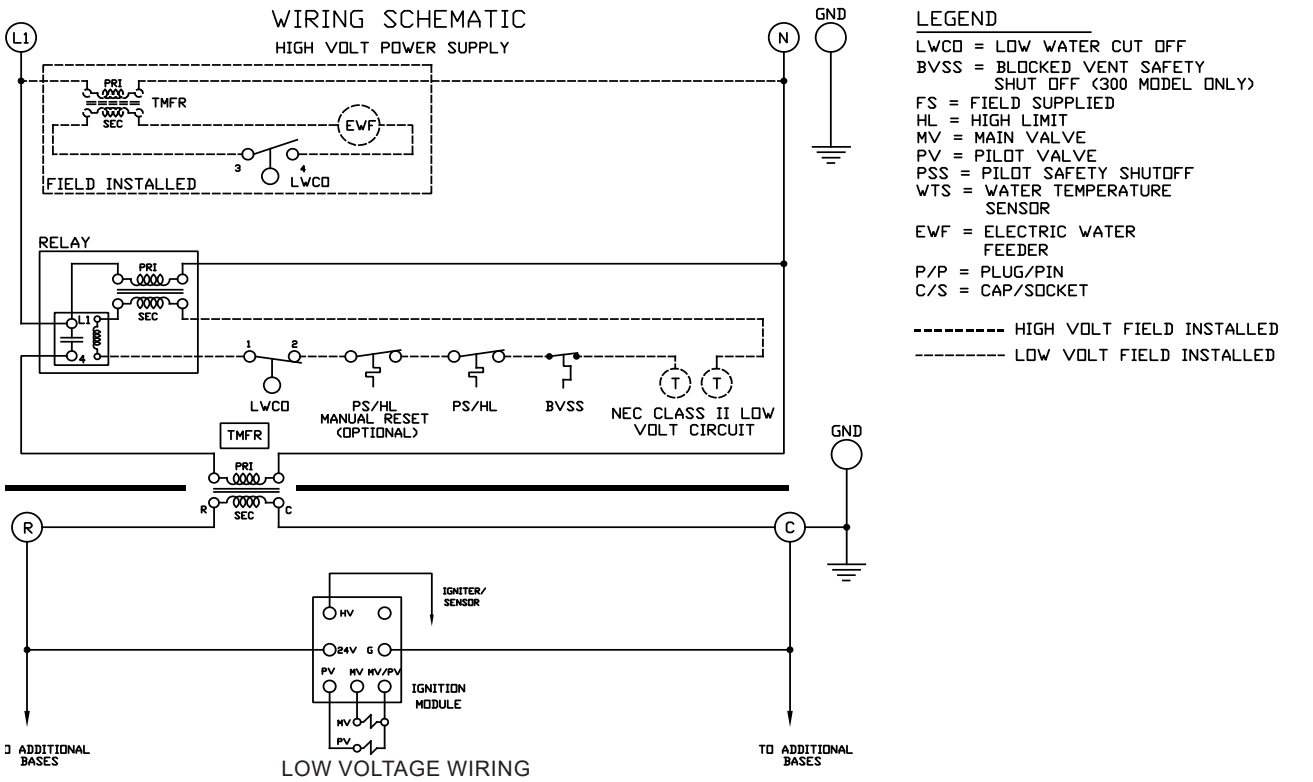

Control Functions And Operation

Control module performs following basic functions:

1. Opens and closes first (pilot) operator of gas valve.
2. Provides spark for igniting pilot burner.
3. Senses pilot burner flame.
4. Shuts off spark after pilot flame is lit.
5. Opens and closes second (main) operator.

Functions occur in two stages - trial for pilot ignition and main burner operation as described below.

Trial For Pilot Ignition

1. On every call for heat (system start), control performs internal safe-start check. If flame simulating condition is present, system will not start.
2. During normal start, control opens first (pilot) valve operator of gas control, which allows gas to flow to pilot burner. At same time, electronic spark generator in control produces 15,000 Volt spark pulse output (open circuit). Voltage produces spark at igniter sensor rod which ignites pilot burner.
3. If pilot flame does not light or presence of pilot flame is not detected back through flame-rod, control will not open second (Main) valve operator of gas control.
4. Control will continue to try to ignite pilot burner until either flame is detected or thermostat (controller) is set below call for heat.

Main Burner Operation

1. When pilot flame is established, flame rectification circuit is completed to burner ground.
2. Control flame sensing circuit detects flame current, shuts off spark generator and opens second (Main) valve operator to allow gas to flow to main burners.
3. Pilot flame ignites main burner conventionally.

Electronic control module cannot be repaired. If troubleshooting procedure indicates malfunction in control, control must be replaced. Intermittent Pilot systems must be serviced by trained service technicians.

Preliminary Check

Make following visual checks before troubleshooting and after maintenance.

1. Check power switch.
2. Open manual shutoff valves in gas line to boiler.
3. Verify all wiring connections are clean and tight.
4. Review control's normal sequence of operation.

System Troubleshooting

1. Set thermostat or controller above room temperature and observe system response.
2. Establish of system malfunction or deviation from normal operation by using Pilot System Troubleshooting Table, in following section.
3. After any maintenance or repair, troubleshooting sequence should be repeated until procedure ends with normal system operation.

Component Verification

Verify Spark Ignition Circuit

Control electronic module and step-up transformer provides spark ignition at 15,000 V (open circuit). Check circuit at control module as follows:

1. Turn off manual gas valve to prevent flow of gas.

⚠WARNING

Electrical shock hazard. Do not touch either end of jumper or stud terminal, high voltage circuit. Failure to follow these instructions could result in death or serious injury.

2. Disconnect ignition cable at control stud terminal to isolate circuit from pilot burner/igniter-sensor.
3. Prepare short jumper lead using heavily insulated wire, such as ignition wire.
4. Energize control.
5. Touch one end of jumper firmly to control ground terminal (GND).
6. ***Do not disconnect existing ground lead.***
7. Move free end slowly toward stud terminal to establish spark.
8. Pull lead wire slowly away from stud. Note length of gap at which arcing discontinues.
9. Arc length of 1/8 inch (3.2 mm) or more indicates satisfactory voltage output.
10. If no arc can be established or maximum gap is less than 1/8 inch (3.2 mm), replace control.

⚠ CAUTION

WHAT TO DO IF YOU SMELL GAS

Do not try to light any appliance.

Do not touch any electrical switch; do not use any phone in your building.

Immediately call your gas supplier from a neighbor's phone. Follow gas supplier's instructions.

If you cannot reach your gas supplier, call the fire department.

Ignition Cable Verification

1. Cable must not run in continuous contact with a metal surface or spark voltage will be greatly reduced.
2. Connections to stud terminal on control and on igniter-sensor must be clean and tight.
3. Loose connections may not conduct flame current even though ignition spark is satisfactory.
4. Check the cable electrical continuity.

Grounding Verification

Ground is required for pilot burner/igniter-sensor mounting bracket, and control GND terminal. If ground is poor or erratic, safety shutdown may occur even though operation is normal at checkout. If nuisance shutdowns occur, check grounding.

Startup And Checkout

If any failure of system component system will not operate. If system does not perform as outlined in Start System, below, refer to Pilot System Troubleshooting Table.

Start System

1. Turn power to control(s) on. Turn off gas supply.
2. Check control(s) operation as follows:
   A. Set Thermostat or controller above room temperature to call for heat.
   B. Watch for spark at pilot burner(s).
   C. Turn on gas supply.
   D. Appliance is equipped with automatic ignition device which automatically lights the pilot. Do not try to light appliance by hand.
   E. Before operating, smell all around appliance area for gas. Be sure to smell next to floor because some gas is heavier than air and will settle on floor. Read *"What To Do If You Smell Gas"* on front page of this manual.above.
   F. Use only your hand to push in or turn gas control knob. Never use tools. If knob will not push in or turn by hand, don't try to repair it, call qualified service technician. Force or attempted repair may result in a fire or explosion.
   G. Do not use this appliance if any part has been under water. Immediately call a qualified service technician to inspect the appliance and to replace any part of control system and any gas control which has been under water.
3. System start:
   A. Spark will turn on and pilot gas valve will open at once. Pilot burner(s) should ignite after gas reaches pilot burner(s).
   B. Spark ignition should cut off when pilot flame is established.
   C. Main gas valve should open and main burners should ignite after gas reaches burner ports.

Light-off may not be satisfactory until gas input and combustion air have been adjusted.

⚠ DANGER

Fire Hazard. Do not use matches, candles, open flames, or other methods providing ignition source. Failure to comply will result in death or serious injury.

Pilot Flame Adjustment

1. Pilot flame should envelop 3/8 to 1/2 inch of tip of insulated rod on igniter-sensor. See **Figure 40**.
2. If adjustment is required, remove pilot adjustment cover screw and turn inner adjustment screw clockwise to decrease or counterclockwise to increase pilot flame.
3. Replace cover screw after adjustment to prevent possible gas leakage.

Test Ignition system safety shutoff device after placing boiler in operation. Disconnect sensor wire from ignition module. Burner operation should stop.

Figure 40 - Proper Flame Adjustment

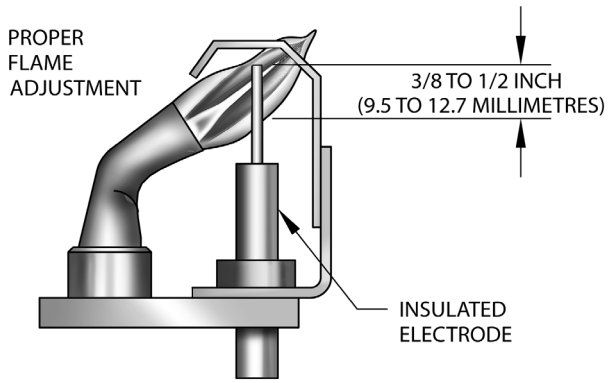

Verify Burner Input

Check boiler for proper Btu input rate. Do not exceed Input rate stamped on nameplate of boiler located on end jacket panel. Verify primary air supply to main burners is properly adjusted for complete combustion.
If boiler is shut down for service, gas and electric must be off for 5 minutes before relighting.

Verify boiler for proper BTU Input proceed as follows:

1. With main burners operating, measure gas Input to boiler by reading the gas meter.
2. Verify all other appliances connected to same meter are shut off.
3. Rate of gas flow (cu. ft. per hour) multiplied by Btu value of gas should match Btu input shown on boiler nameplate.
4. If it is not within +/- 2%, adjust Pressure Regulator to obtain desired flow. Adjustment stem can be found cap regulator top. Adjustment screw is plastic and may require slightly greater turning force than metal threads.
5. Turn clockwise to increase input and counterclockwise to decrease input rate.
6. Replace Regulator Cap.

Verify Combustion:

Using a combustion analyzer measure the %CO2 in flue gasses. Compare the measured values with values in table below.

	FLUE	STACK
% CO2	7.5 - 9.0	4.5 - 6.0

High Limit Control

While boiler is operating, set high limit control below boiler water temperature and main burners should shut off. Return control to normal setting. Main burners should restart.

⚠ WARNING

Burn and scald hazard. Discharge of water, vapor and steam may scald. Failure to follow these instructions could result in death or serious injury.

Pressure Relief Valve

1. Pressure relief valve on boiler is required.
2. Run a pipe from pressure relief valve outlet to appropriate open drain.
3. Pipe must be of same size as outlet on valve and open end must not be threaded.
4. Run drain in area not subject to freezing. Failure to do so may cause water damage or injury should valve release.
5. If valve discharge occurs, or valve fails to open as described above, contact service technician to replace relief valve and inspect heating system to determine cause, as this may indicate equipment malfunction.
6. Follow valve manufacture instructions for testing and maintenance.

Burner And Pilot Flame

1. Manufacture recommends visual check of burners and pilot flame monthly during heating season by owner and once year by service technician. See **Figure 41.**
2. Look for deterioration from corrosion of burners, pilot burners and boiler base frame.
3. Clean boiler base interior and exterior.

Burner And Pilot Flame

Manufacture recommends flue passages, burner adjustments and operation of boiler controls be checked once a year by a service technician.

To clean flue passages:

A. Remove burners and pilot(s) from boiler.
B. Remove clean-out cover panel on draft hood to expose flue passages. See **Figure 13 page 16.**
C. Clean flue passageways between sections with flexible handle wire brush. Remove all dirt from bottom of boiler and reassemble all parts.
D. Verify pilot connection(s), adjustment of pilot(s) and burner flames after reassembly.

Figure 41 - Pilot and Flame

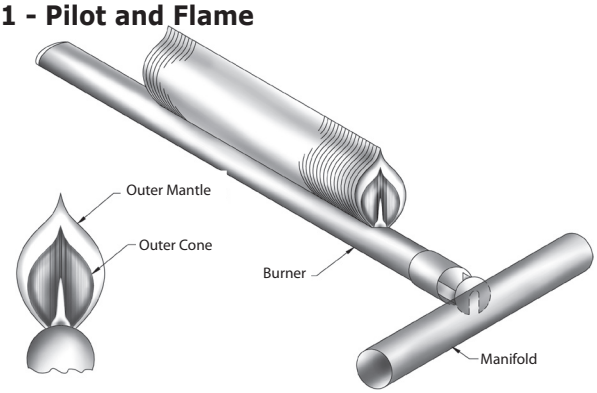

⚠ WARNING

Asphyxiation hazard. Improper installation could result in death or serious injury. Failure to follow these instructions could result in death or serious injury.

Venting System

1. Check chimney for correct size, proper construction, clean and in good condition to ensure proper combustion.
2. You must provide enough fresh air for combustion.
3. If your building is of tight construction, it may be necessary to add fresh air duct to provide oxygen. See **Chart 3, page 8**.
4. Monthly during heating season check that sections of vent pipe are secure at all joints and fittings. There should be at least two (2) sheet metal screws per joint.
5. Check that vent pipe slopes at least 1/4" per foot up from boiler to chimney.
6. Vent pipe should be securely fastened to prevent sagging.
7. Check vent Pipe for any deterioration from corrosion or any other sources.
8. Refer to Venting and Combustion Air instructions in this manual.

Cleaning The Steam Boiler

Steam boilers must be cleaned prior to use in order to ensure efficient operation.

Grease, oil, sand and dirt cause scum to form on the surface of water in new boilers. Heavier particles carried in grease may settle to bottom of boiler and form sludge. If permitted to remain in boiler it will prevent generation of steam, produces foaming and causes an unsteady water line. Remove accumulation of oil and grease by blowing off boiler as follows:

1. Install surface skim connection of at least 1¼" nominal pipe size in boiler using skim tee. See **Figure 38** page 27. Skim line should extend to within 18" of floor or appropriate drain.
   A. Insert valve in line close to boiler.
2. Bring water line to center of outlet.
   A. Raise temperature to just below steaming.
   B. While burners are on, open the valve in skim line and slowly feed clean water into boiler adjusting inlet water so boiler water remains hot.
   C. Continue skimming until water is clean.
3. Close valves in boiler feed line and skim line.
4. Bring boiler pressure to about 10 lbs.
   A. Turn burners off.
   B. Open bottom drain valve permitting all water to drain from boiler.
5. After boiler has cooled, fill and flush out several times.
6. Fill to proper water level and ready for normal service.

Do not use soda or any alkali, vinegar or acid for cleaning heating boilers, it is difficult to completely remove them. Injury may occur after cleaning process if these agents are used.

Boiler Water Treatment

In closed water heating systems, negligible amounts of make up water are used, and water treatment is not required.

In steam systems where system is tight, free from leaks, and all steam is returned to boiler as condensate, amount of make up water is small. Water treatment is not required.

On steam systems with less than 90% of steam being returned as condensate, or with very hard or corrosive make up water, treatment may be desirable. Follow recommendations of ASME (American Society of Mechanical Engineers) Boiler and Pressure Vessel Code, Section VI, latest version.

Between Heating Seasons

Boilers should not be drained between heating seasons. Boilers in closed hot water heating systems may be left as is. Steam boilers should be entirely filled with water during the summer months to exclude air.

Low Water Cutoff(s)

Inspect low water cutoff(s) annually or as recommended by low water cutoff manufacture. Flush float types per manufacturer's instructions.

General Housekeeping

- Keep boiler area clear and free from combustible materials, gasoline and other flammable vapors and liquids.
- Keep boiler area clear of obstructions to flow of combustion and ventilation air.

PILOT SYSTEM TROUBLESHOOTING TABLE

Turn gas supply OFF. Turn thermostat (controller) to call for heat.

Power to module (24V module)

NO →

NOTE: Before troubleshooting, familiarize yourself with startup and check procedure.

Check line voltage power, low voltage transformer, limit controller, thermostat (controller) and wiring. Also, check air proving switch on combustion air blower system (if used) and that vent damper (if used) is open and end switch is made.

YES ↓

Spark Across Igniter/Sensor Gap.

NO →

Pull ignition lead and check spark at module.

Spark okay?

NO →

- On models with vent damper plug, make sure vent damper has not been installed, then removed. Replace vent damper if necessary.
- On other models, replace module.

YES ↓

- Check ignition cable, ground wiring, ceramic insulator and gap, and correct.
- Check boot of the ignition cable for signs of melting or bucking. Take protective action to shield cable and boot from excessive temperatures.

YES ↓

Turn gas supply ON.

Pilot Burner Lights?

NO →

- Check that all manual gas valves are open, supply tubing and pressures are good, and pilot burner orifice is not blocked.
- Check electrical connection between module and pilot operator on gas control.
- Check for 24 Vac across PV-MV/PV terminals on module. If voltage is okay, replace gas control: if not, replace module.

YES ↓

NOTE: If the control, goes into lockout, reset system.

Spark Stops When Pilot Lit?

NO →

- Check continuity of ignition cable and ground wire.
- Clean flame rod.
- Check electrical connections between flame rod and module.
- Check for cracked ceramic flame rod insulator.
- Check that pilot flame covers flame rod and is steady and blue.
- Adjust pilot flame.
- If problem persists, replace module.

YES ↓

Main Burner Lights?

NO →

- Check for 24 Vac across MV-MV/PV terminals. If no voltage, replace module.
- Check electrical connections between module and gas control. If okay, replace gas control or gas control operator.

YES ↓

NOTE: If the control, goes into lockout, reset system.

System Runs Until Call For Heat Ends.

NO →

- Check continuity of ignition cable and ground wire.

NOTE: *If ground is poor or erratic, shutdowns may occur occasionally even though operation is normal at the time of checkout.*

- Check that pilot flame covers flame rod and is steady and blue.
- If checks okay, replace module.

YES ↓

Call For Heat Ends

System Shuts OFF?

NO →

- Check for proper thermostat (controller) operation.
- Remove MV lead at module: if valve closes, recheck temperature controller and wiring: if not, replace gas control.

YES ↓

Troubleshooting Ends.

NO →

Repeat procedure until trouble free operation is obtained.

NOTES

NOTES

NOTES

IMPORTANT

In accordance with Section 325 (f) (3) of the Energy Policy and Conservation Act, this boiler is equipped with a feature that saves energy by reducing the boiler water temperature as the heating load decreases. This feature is equipped with an override which is provided primarily to permit the use of an external energy management system that serves the same function.

THIS OVERRIDE MUST NOT BE USED UNLESS AT LEAST ONE OF THE FOLLOWING CONDITIONS IS TRUE:

- An external energy management system is installed that reduces the boiler water temperature as the heating load decreases.
- This boiler is not used for any space heating
- This boiler is part of a modular or multiple boiler system having a total input of 300,000 BTU/hr or greater.
- This boiler is equipped with a tankless coil.

ECR international

2260 Dwyer Avenue, Utica, NY 13501

Tel. 800 325 5479

www.ecrinternational.com

All specifications subject to change without notice.

©2026 ECR International, Inc.